EasyPact EZC100 to 400A

Circuit breakers

Catalogue

2008

Schneider Electric

General contents

EasyPact™

So Easy and simple

PB101844-27 PB101848-35 PB102114-40

EZC100. *EZC250.* *EZC400.*

With only three sizes of circuit breakers, the *EasyPact* system is the simple and universal solution to fit all the needs in terms of low voltage protection.

DB115728

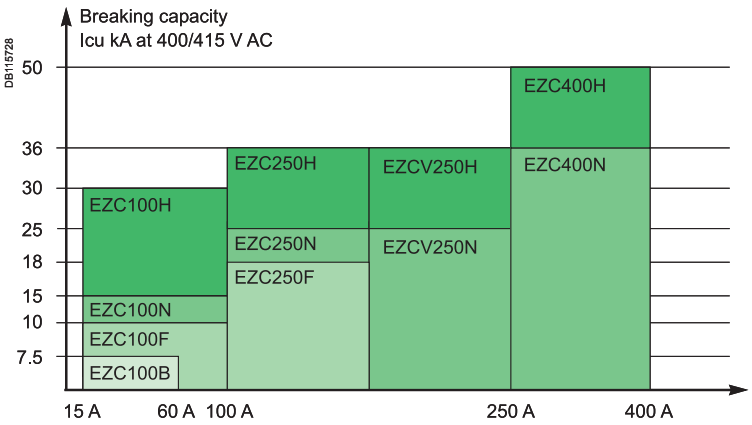

EasyPact range complies with worldwide standards

- IEC 60947-2
- EN 60947-2
- JIS C8201-2-1/C8201-2-2 (annex 1 and 2)
- GB 14048.2
- Nema-AB1
- UL508
- CSA22-2
- IACS for Merchant Marine.
  (International Association of Classification Societies: Veritas, Germanisher Lloyd's, Rina, USSR, Lloyd's Register).

with international certifications and approvals by independent Laboratories
ASEFA, KEMA, TILVA, TÜV, UL.

and compliance to RoHS Directive (Restriction of Hazardous Substances)

DB115729

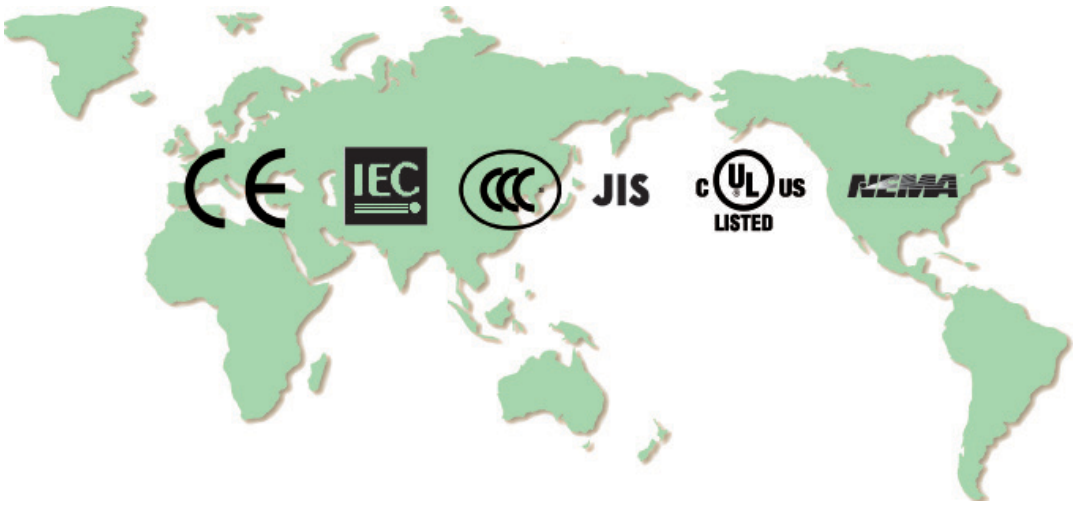

PB101848-34

EZC250.

PB101851-34

EZCV250.

Easy to choose

*Easy**Pact*** brings you easy solutions

- From 15 A to 400 A
- Up to 50 kA at 415 V
- Up to 4 poles
- In only three frame sizes
- With a complete range of auxiliaries and accessories

Easy to install

- Fixed front mounting
- Front connections
- Bare cables connected through cable lugs, screwed inside the breaker
- Field-installable auxiliaries and accessories
- Built-in earth-leakage protection
- Interchangeable MCCB and ELCB

Easy to use

- A thermal calibration suitable for MCCB use at 50°C without derating
- Positive contact indication for safety and reliability

DB112479

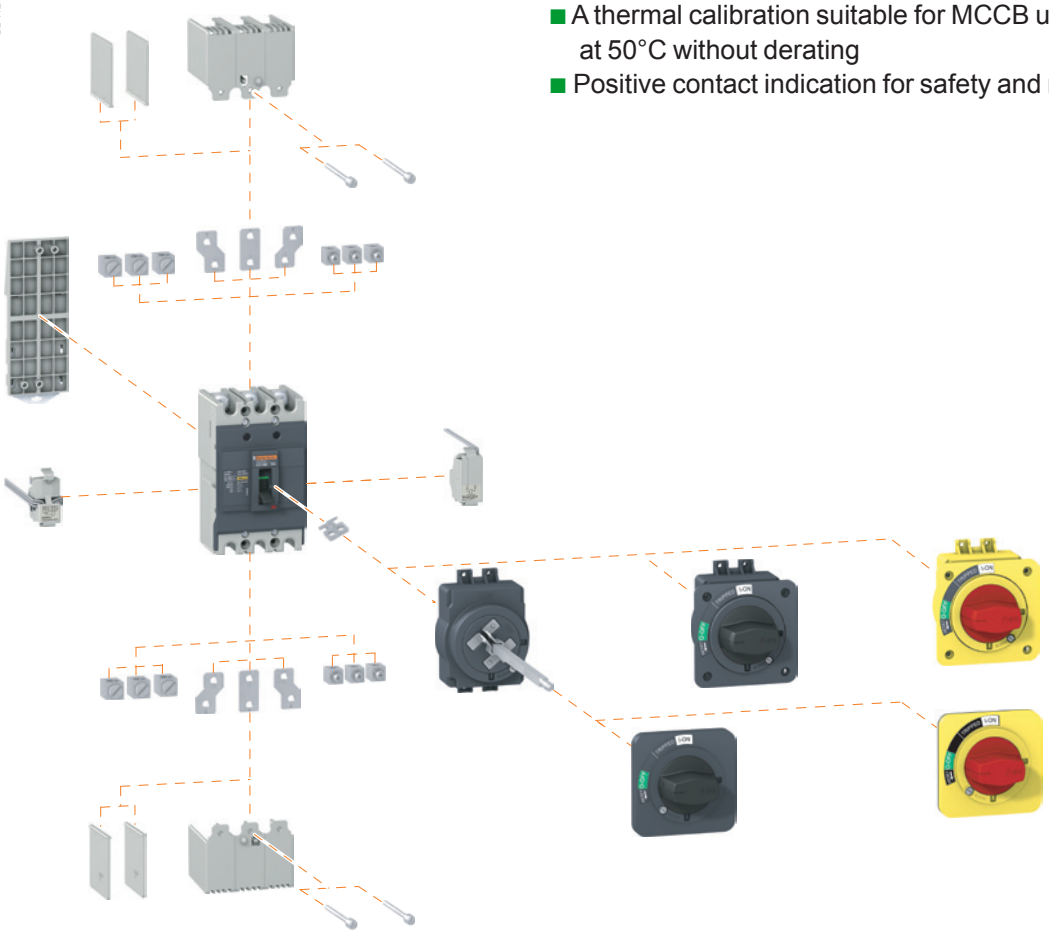

DB106482

Circuit breakers

General characteristics

DB112373

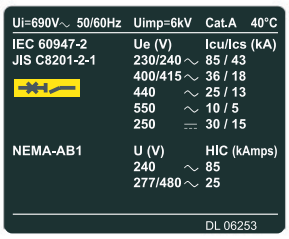

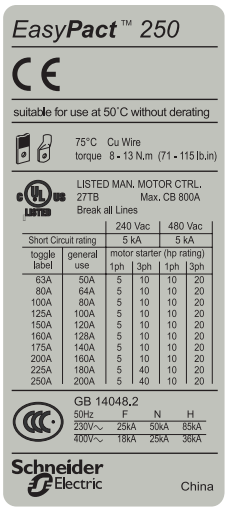

DB112374

Standardised characteristics indicated on the rating plate:

Ui:	*rated insulation voltage*
Uimp:	*rated impulse withstand voltage*
Ue:	*rated operational voltage*
Icu:	*ultimate breaking capacity, for various values of the rated operational voltage Ue*
Cat:	*utilisation category*
Ics:	*service breaking capacity*
In:	*rated current*
	suitability for isolation

PB101844-25

EZ101PR-28

Compliance with standards

EasyPact circuit breakers and auxiliaries comply with the following international standards:

- IEC 60947-1 - general rules
- IEC 60947-2 - low-voltage switchgear and controlgear, part 2 (circuit breakers)
- European (EN 60947-1 and EN 60947-2) and the corresponding national standards
- GB 14048.2
- JIS C8201-2-1 Annex 1 and Annex 2, for molded case circuit breakers
- JIS C8201-2-2 Annex 1 and Annex 2, for earth-leakage circuit breakers
- NEMA-AB1 (High Interrupting Capacity): American standard
- UL508/CSA 22-2 no. 14.

Approvals and Certifications

- IEC certification by independent laboratories (ASEFA, KEMA, TÜV)
- CE marking
- certified by third party Tilva
- certified by third party Underwriter Laboratories as a “Manual Motor Controller” (EZC250/EZCV250/EZC400).

Vibration and shock withstand test

EasyPact circuit breakers resist mechanical vibrations and shocks.
Tests are carried out in compliance with standard IEC 60068-2-6 for the levels required by merchant-marine inspection organisation IACS: International Association of Classification Societies (Veritas, Germanisches Lloyd’s, Rina, USSR, Lloyd’s Register):

- 2 to 13.2 Hz: amplitude ± 1 mm
- 13.2 to 100 Hz: acceleraton 0.7 g.

Pollution degree

EasyPact circuit breakers are certified for operation in pollution-degree III . environments as defined by IEC standard 60947 (industrial environments)

Tropicalisation

EasyPact circuit breakers have successfully passed the tests prescribed by the following standards for extreme atmospheric conditions:

- IEC 60068-2-1 - dry cold (-55 °C)
- IEC 60068-2-2 - dry heat (+85 °C)
- IEC 60068-2-30 - damp heat (95 % relative humidity at 55 °C)
- IEC 60068-2-52 - salt mist (severity level 2).

Positive contact indication

All EasyPact circuit breakers are suitable for isolation as defined in IEC standard 60947-2:

- the isolation position corresponds to the O (OFF) position
- the operating handle cannot indicate the O (OFF) position (“green colour” visible) unless the contacts are effectively open
- padlocks may not be installed unless the contacts are open
- installation of a rotary handle does not alter the reliability of the position-indication system.

The isolation function is certified by tests guaranteeing:

- the mechanical reliability of the position indication system
- the absence of leakage currents
- overvoltage withstand capacity between upstream and downstream connections.

Environmental protection

EasyPact circuit breakers take into account important concerns for environmental protection. Most components are recyclable and the parts are marked as specified in applicable standards.

General characteristics (cont.)

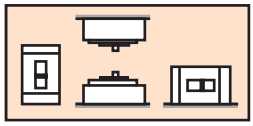

Installation positions.

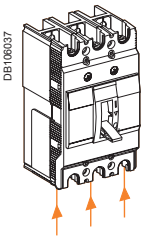

Reverse feeding.

Ambient temperature

■ EasyPact circuit breakers has been particularly designed to hold 100 % In at 50°C without tripping in normal condition (except for earth-leakage circuit breakers).
■ EasyPact circuit breakers may be used between -25 °C and +70 °C.
■ The permissible storage-temperature range for EasyPact circuit breakers in the original packing is -35 °C to +85 °C.

Installation

EasyPact circuit breakers are designed for easy installation in the various types of switchboards. They may be mounted vertically, horizontally or flat on their back without any derating of characteristics.

Power supply

EasyPact circuit breaker can be supplied from either the top or the bottom (reverse feeding) without any reduction in performance. For earth-leakage circuit breakers, reverse feeding is possible only up to 240 V AC.
This capability facilitates connection when installed in a switchboard.

Degree of protection

As per standards IEC 60529 (IP degree of protection) and EN 50102 (IK degree of protection against external mechanical impacts).

Bare circuit breaker with terminal shields

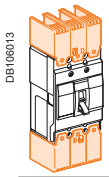 DB106013	With toggle	IP20	IK07
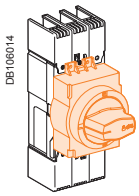 DB106014	With direct rotary handle standard	IP40	IK07

Circuit breaker installed in a switchboard

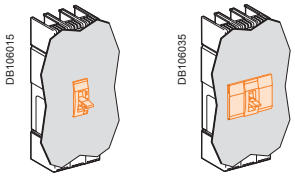 DB106015 DB106035	With toggle	IP40	IK07
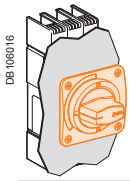 DB106016	With direct rotary handle standard/VDE MCC	IP54	IK07
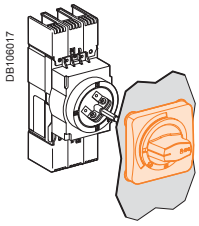 DB106017	With extended rotary handle	IP54	IK08

General characteristics (cont.)

PB101851-37

Earth-leakage protection

EasyPact circuit breakers have a specific version including earth-leakage protection. This protection is fully integrated inside the breaker and does not require any additional space.
EasyPact circuit breakers and earth-leakage circuit breakers are fully interchangeable.

Compliance with standards

EasyPact earth-leakage circuit breakers comply with all the international standards listed page 6 :
- IEC 60947-1
- IEC 60947-2
- EN 60947-1
- EN 60947-2
- GB 14048.2
- JIS C8201-2-2 Annex 1 and Annex 2
- NEMA-AB1 (High Interrupting Capacity)
- UL508/CSA 22-2 no. 14.

They also comply with:
- VDE 664, operation down to -25 °C
- IEC 60255-4 and IEC 60801-2 to 60801-5 covering protection against nuisance tripping due to transient overvoltages, lightning strikes, switching of devices on the distribution system, electrostatic discharges, radiofrequency interference.

DB112379

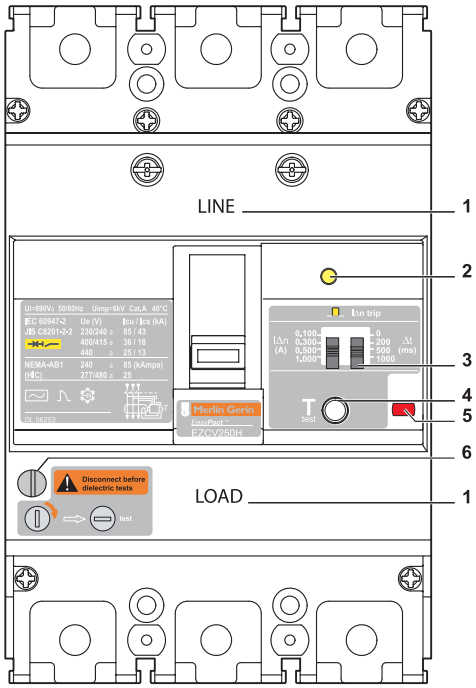

1 Line-Load (Ue > 300 V AC)
2 Mechanical indicator (ELCB)
3 Adjustable settings IΔn and time delay
4 ELCB test button
5 Push to trip button (MCCB)
6 Dielectric tests: disconnecting switch

Power supply

Reverse feeding
EasyPact earth-leakage circuit breakers can be supplied from either the top or the bottom for voltages up to 300 V AC. For voltages over 300 V AC, only supply from the top is possible (Line-Load indication on the cover of the breaker).

Power supply of the electronics
EasyPact earth-leakage circuit breakers are self-supplied by the distribution-system voltage and therefore do not require any external source. They fully comply with new IEC requirements (Annex B): they are powered from the three phases and continue to function even if one phase is missing.

Dielectric tests

EasyPact earth-leakage circuit breakers are equipped with a disconnecting switch in order to protect the electronics during dielectric tests.
When the disconnecting switch is activated, the circuit breaker is automatically tripped. It is mechanically impossible to switch on the circuit breaker, until the earth-leakage function is re-energised.

Tripping features

Tripping indications:
- EasyPact earth-leakage circuit breakers have a yellow mechanical indicator to locally signal tripping due to an earth fault.
- EasyPact earth-leakage circuit breakers may be equipped with an earth-leakage alarm switch (ALV) to remotely signal tripping due to an earth fault.

Resetting
EasyPact earth-leakage circuit breakers are fully reset by the operating handle. After resetting, tripping indicators (mechanical and ALV) come to normal position.

ELCB protection characteristics

Sensitivity IΔn (A)		adjustable	0.1 - 0.3 - 0.5 - 1
Time delay	Intentional delay (ms)	adjustable	0 - 200 - 500 - 1000
	Max. breaking time (s)		0.15 – 0.4 – 1 - 2
Rated voltage	AC 50/60 Hz (V)		100…440

Earth-leakage circuit breakers

With three built-in protections:

- overload
- short-circuit
- earth-leakage.

From 63 A to 250 A

With adjustable sensibility and time delay

Up to 36 kA at 415 V

In 3 poles and 4 poles

DB112375

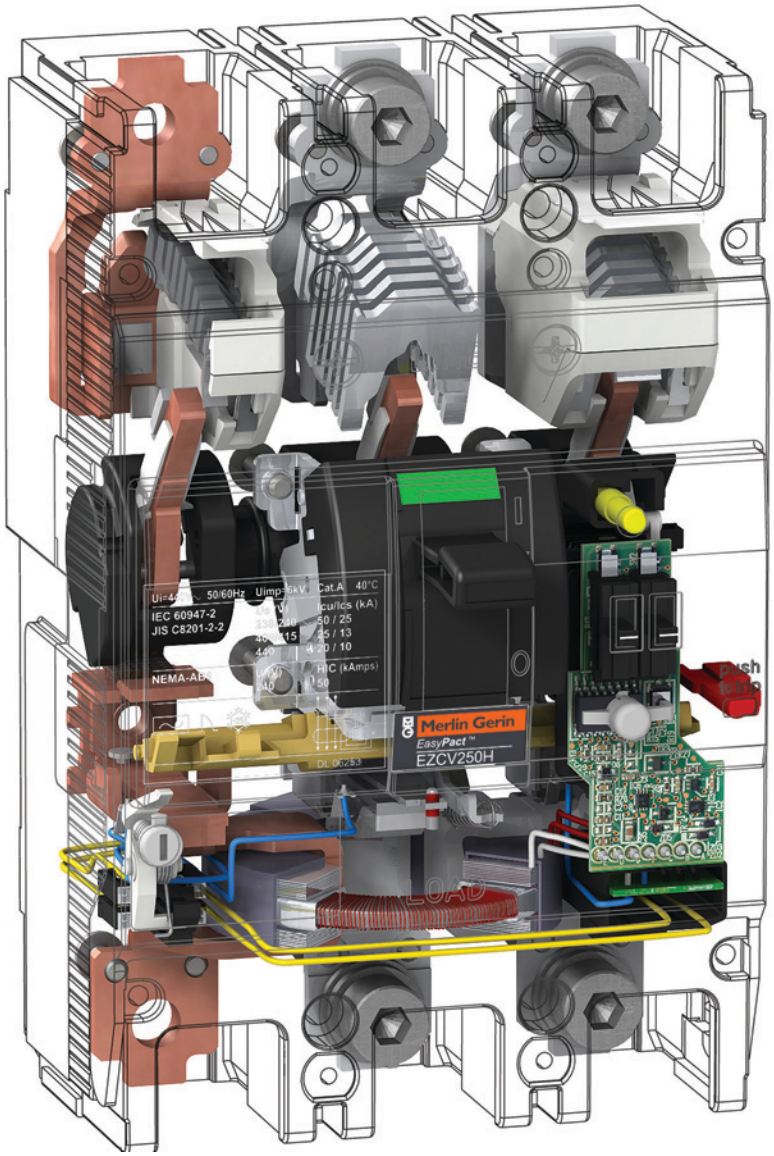

Selection table


PB101838-10

EZC100-1P.


PB101940-15

EZC100-2P.


PB101843-22

EZC100-3P.


PB102172-27

EZC100-4P.


PB101845-29

EZC250-3P.

EasyPact circuit breakers			
Number of poles			
Rated current (A)	**In**	at 40 °C	
Rated insulation voltage (V)	**Ui**		
Rated impulse withstand voltage (kV)	**Uimp**		
Rated operational voltage (V)	**Ue**	AC 50/60 Hz	
		DC	
Electrical characteristics as per IEC 60947-2, EN 60947-2, JIS C8201-2-1			
Ultimate breaking capacity (kA rms)	**Icu**	AC 50/60 Hz	110/130 V
			220/230/240 V
			380 V
			400/415 V
			440 V
			550 V
		DC	125 V (1P)
			250 V (2P in series)
Rated service breaking capacity (kA rms)	**Ics**	% Icu	110-400 V
			415-550 V
Suitability for isolation			
Utilisation category			
Pollution degree			
Endurance (C-O cycles)	Mechanical		
	Electrical	In/415 V	
Electrical characteristics as per NEMA-AB1			
Breaking capacity (kA rms)	**HIC**	AC 50/60 Hz	240 V
			277/480 V
Protection			
Overload protection	Bimetal		
Instantaneous protection	Magnetic		Fixed (±20 %)
Auxiliaries			
Indication contacts	Auxiliary switch		AX
	Alarm switch		AL
	Combined AX + AL		AXAL
Voltage releases	Shunt trip release		SHT
	Undervoltage release		UVR
Installation			
Connection	Crimp lugs/bars		
Accessories	Box lugs for bare cables		
	Rotary handles		Direct
			Extended
	Terminal extensions		
	Spreaders		
	Phase barriers		
	Terminal shields		
	Padlocking system		
	DIN rail adaptor		
Dimension and weight			
Dimensions (mm)	D x H		
	W		
Weight (kg)			

Selection table (cont.)

EZC100B	EZC100F	EZC100N		EZC100H		EZC250F	EZC250N	EZC250H
3	3	1	3-4	1	2-3-4	3	3	2-3
15, 16, 20, 25, 30, 32, 40, 45, 50, 60	15, 16, 20, 25, 30, 32, 40, 45, 50, 60, 63, 75, 80, 100	15, 16, 20, 25, 30, 32, 40, 45, 50, 60, 63, 75, 80, 100	15, 16, 20, 25, 30, 32, 40, 45, 50, 60, 63, 75, 80, 100	15, 16, 20, 25, 30, 32, 40, 45, 50, 60, 63, 75, 80, 100	15, 16, 20, 25, 30, 32, 40, 45, 50, 60, 63, 75, 80, 100	100, 125, 150, 160, 175, 200, 225, 250	100, 125, 150, 160, 175, 200, 225, 250	100, 125, 150, 160, 175, 200, 225, 250
690	690	690	690	690	690	690	690	690
6	6	6	6	6	6	6	6	6
550	550	415	550	415	550	550	550	550
-	250	125	250	125	250	250	250	250
10	25	25	25	50	100	25	50	85
10	25	**18**	25	**25**	100 (1)	25	50	85
7.5	10	2.5	18	5	30	18	25	36
7.5	**10**	2.5	**15**	5	**30**	**18**	**25**	**36**
5	7.5	-	10	-	20	15	20	25
2.5	5	-	5	-	10	5	8	10
-	5	5	5	10	10	5	20	30
-	5	-	5	-	10	5	20	30
25 %	50 %	50 %	50 %	50 %	50 %	50 %	50 %	50 %
25 %	50 %	50 %	50 %	50 %	25 %	50 %	50 %	50 %
■	■	■	■	■	■	■	■	■
A	A	A	A	A	A	A	A	A
3	3	3	3	3	3	3	3	3
8 500	8 500	8 500	8 500	8 500	8 500	10 000	10 000	10 000
1 500	1 500	1 500	1 500	1 500	1 500	5 000	5 000	5 000
-	-	10	25	18	100	25	50	85
-	-	10 (2)	10	18 (2)	18 (3)	15	18	25 (3)
fixed	fixed	fixed	fixed	fixed	fixed	fixed	fixed	fixed
fixed	fixed	fixed	fixed	fixed	fixed	10 In	10 In	10 In
■	■	-	■	-	■	■	■	■
■	■	-	■	-	■	■	■	■
■	■	-	■	-	■	■	■	■
■	■	-	■	-	■	■	■	■
■	■	-	■	-	■	■	■	■
■	■	■	■	■	■	■	■	■
■	■	■	■	■	■	■	■	■
■	■	-	■	-	■ (3)	■	■	■
■	■	-	■	-	■ (3)	■	■	■
-	-	-	-	-	-	■	■	■
■	■	-	■	-	■	■	■	■
■	■	■	■	■	■	■	■	■
■	■	-	■	-	■ (3)	■	■	■
■	■	■	■	■	■	■	■	■
■	■	■	■	■	■	-	-	-
60 x 130	60 x 130	60 x 130	60 x 130	60 x 130	60 x 130	60 x 165	60 x 165	60 x 165
75	75	25	75 (3P), 100 (4P)	25	50 (2P), 75 (3P), 100 (4P)	105	105	105
0.78	0.78	0.28	0.78 (3P), 1.0 (4P)	0.28	0.6 (2P), 0.78 (3P), 1.0 (4P)	1.3	1.3	1.1 (2P), 1.3 (3P)

(1) 50 kA for 2 poles.
(2) For 277 V only.
(3) For 3 poles only.

Selection table (cont.)

PB101852-32

EZC250.

PB101854-34

EZCV250-4P.

PB102114-28

EZC400-3P.

PB102115-36

EZC400-4P.

EasyPact circuit breakers			
Number of poles			
Rated current (A)	**In**	at 40°C	
Rated insulation voltage (V)	**Ui**		
Rated impulse withstand voltage (kV)	**Uimp**		
Rated operational voltage (V)	**Ue**	AC 50/60 Hz	
		DC	
Electrical characteristics as per IEC 60947-2, EN 60947-2 and JIS C8201-2-1/C8201-2-2			
Ultimate breaking capacity (kA rms)	**Icu**	AC 50/60 Hz	220/230/240 V
			380 V
			400/415 V
			440 V
			550 V
		DC	125 V (1P)
			250 V (2P in series)
Rated service breaking capacity (kA rms)	**Ics**	% Icu	
Suitability for isolation			
Utilisation category			
Pollution degree			
Endurance (C-O cycles)	Mechanical		
	Electrical	In/415 V	
Electrical characteristics as per NEMA-AB1			
Breaking capacity (kA rms)	**HIC**	AC 50/60 Hz	240 V
			277/480 V
Protection			
Overload protection	Bimetal		
Instantaneous protection	Magnetic		fixed (± 20 %)
Earth-leakage protection			
Sensitivity (A)	IΔn		adjustable
Time-delay (ms)	Δt		adjustable
Max. breaking time (s)	at 2 IΔn		
Auxiliaries			
Indication contacts	Auxiliary switch	AX	
	Alarm switch	AL	
	Combined AX + AL	AXAL	
	Earth-alarm switch	ALV	
Voltage releases	Shunt trip release	SHT	
	Undervoltage release	UVR	
Installation			
Connection	Crimp lugs / bars		
Accessories	Box lugs for bare cables		
	Rotary handles	Direct	
		Extended	
	Terminal extensions		
	Spreaders		
	Phase barriers		
	Terminal shields		
	Padlocking system		
Dimension and weight			
Dimensions (mm)	D x H		
	W		
Weight (kg)			

Selection table (cont.)

EZC250N	EZC250H	EZCV250N	EZCV250H	EZC400N	EZC400H
4	4	3-4	3-4	3-4	3-4
63, 80, 100, 125, 150, 160, 175, 200, 225, 250	63, 80, 100, 125, 150, 160, 175, 200, 225, 250	63, 80, 100, 125, 150, 160, 175, 200, 225, 250	63, 80, 100, 125, 150, 160, 175, 200, 225, 250	250, 300, 320, 350, 400	250, 300, 320, 350, 400
690	690	440	440	690	690
6	6	6	6	8	8
550	550	440	440	550	550
250	250	-	-	250	250
50	85	85	100	85	100
25	36	25	36	36	50
25	**36**	**25**	**36**	**36**	**50**
20	25	20	25	36	50
8	10	-	-	15	20
20	30	-	-	-	-
20	30	-	-	20	40
50 %	50 %	50 %	50 %	50 %	50 %
■	■	■	■	■	■
A	A	A	A	A	A
3	3	3	3	3	3
10 000	10 000	10 000	10 000	4 000	4 000
5 000	5 000	5 000	5 000	1 000	1 000
50	85	50	85	50	85
18	25	-	-	25	35
fixed	fixed	fixed	fixed	fixed	fixed
10 In	10 In	10 In	10 In	10 In	10 In
-	-	0.1/0.3/0.5/1	0.1/0.3/0.5/1	-	-
-	-	0/200/500/1000	0/200/500/1000	-	-
-	-	0.15/0.4/1/2	0.15/0.4/1/2	-	-
■	■	■	■	■	■
■	■	■	■	■	■
■	■	■	■	■	■
-	-	■	■	-	-
■	■	■	■	■	■
■	■	■	■	■	■
■	■	■	■	■	■
■	■	■	■	■	■
■	■	■	■	■	■
■	■	■	■	■	■
■	■	■	■	■	■
■	■	■	■	■	■
■	■	■	■	■	■
■	■	■	■	■	■
■	■	■	■	■	■
68 x 165	68 x 165	68 x 165	68 x 165	103 x 257	103 x 257
140	140	105 (3P) 140 (4P)	105 (3P) 140 (4P)	140 (3P) 185 (4P)	140 (3P) 185 (4P)
1.8	1.8	1.6 (3P) 2.1 (4P)	1.6 (3P) 2.1 (4P)	5 (3P) 7.5 (4P)	5 (3P) 7.5 (4P)

Catalogue numbers
EZC100B 7.5 kA (400 V AC)
EZC100F 10 kA (400 V AC)

PB101841-20

EZC100B 15 to 63 A				
Number of poles		**3P**		
Current rating (A)		**15 - 16 - 20 - 25 - 30 - 32 - 40 - 45 - 50 - 60**		
Breaking capacities (kA rms) as per IEC 60947-2, EN 60947-2, JIS C8201-2-1				
		Ue (V)	**Icu (kA)**	**Ics (% Icu)**
Ue = 550 V	AC	220/230/240	10	25 %
Ui = 690 V		**380/400/415**	**7.5**	25 %
Uimp = 6 kV		440	5	25 %
		550	2.5	25 %
Rating		**Cat. no.**		
15 A		**EZC100B3015**		
16 A		**EZC100B3016**		
20 A		**EZC100B3020**		
25 A		**EZC100B3025**		
30 A		**EZC100B3030**		
32 A		**EZC100B3032**		
40 A		**EZC100B3040**		
45 A		**EZC100B3045**		
50 A		**EZC100B3050**		
60 A		**EZC100B3060**		

PB101842-20

EZC100F 15 to 100 A				
Number of poles		**3P**		
Current rating (A)		**15 - 16 - 20 - 25 - 30 - 32 - 40 - 45 - 50 - 60 - 63 - 75 - 80 - 100**		
Breaking capacities (kA rms) as per IEC 60947-2, EN 60947-2, JIS C8201-2-1				
		Ue (V)	**Icu (kA)**	**Ics (% Icu)**
Ue = 550 V	AC	220/230/240	25	50 %
Ui = 690 V		**380/400/415**	**10**	50 %
Uimp = 6 kV		440	7.5	50 %
		550	5	50 %
	DC	125 (1P)	5	50 %
		250 (2P)	5	50 %
Rating		**Cat. no.**		
15 A		**EZC100F3015**		
16 A		**EZC100F3016**		
20 A		**EZC100F3020**		
25 A		**EZC100F3025**		
30 A		**EZC100F3030**		
32 A		**EZC100F3032**		
40 A		**EZC100F3040**		
45 A		**EZC100F3045**		
50 A		**EZC100F3050**		
60 A		**EZC100F3060**		
63 A		**EZC100F3063**		
75 A		**EZC100F3075**		
80 A		**EZC100F3080**		
100 A		**EZC100F3100**		

Catalogue numbers
EZC100N 15 kA (400 V AC)

EZC100N-1P.

EZC100N-3P.

EZC100N-4P.

EZC100N 15 to 100 A	
Number of poles	**1P, 3P and 4P**
Current rating (A)	**15 - 16 - 20 - 25 - 30 - 32 - 40 - 45 - 50 - 60 - 63 -75 - 80 - 100**

Breaking capacities (kA rms) as per IEC 60947-2, EN 60947-2, JIS C8201-2-1

		Ue (V)	Icu (kA) 1P	Icu (kA) 3P - 4P	Ics (% Icu) 1P - 3P - 4P
Ue = 550 V	AC	110/130	25	25	50 %
Ui = 690 V		220/230/240	**18**	25	50 %
Uimp = 6 kV		**380**	2.5	**18**	50 %
		400/415	2.5	**15**	50 %
		440	-	10	50 %
		550	-	5	50 %
	DC	125 (1P)	5	5	50 %
		250 (2P)	-	5	50 %

Breaking capacities (kA rms) as NEMA-AB1

	Ue (V)	HIC (kA) 1P	HIC (kA) 3P - 4P
AC	240	-	25
	277	10	-
	277/480	-	10

Rating	**Cat. no.** 1P	3P	4P 3t
15 A	**EZC100N1015**	**EZC100N3015**	**EZC100N4015**
16 A	**EZC100N1016**	**EZC100N3016**	**EZC100N4016**
20 A	**EZC100N1020**	**EZC100N3020**	**EZC100N4020**
25 A	**EZC100N1025**	**EZC100N3025**	**EZC100N4025**
30 A	**EZC100N1030**	**EZC100N3030**	**EZC100N4030**
32 A	**EZC100N1032**	**EZC100N3032**	**EZC100N4032**
40 A	**EZC100N1040**	**EZC100N3040**	**EZC100N4040**
45 A	**EZC100N1045**	**EZC100N3045**	**EZC100N4045**
50 A	**EZC100N1050**	**EZC100N3050**	**EZC100N4050**
60 A	**EZC100N1060**	**EZC100N3060**	**EZC100N4060**
63 A	**EZC100N1063**	**EZC100N3063**	**EZC100N4063**
75 A	**EZC100N1075**	**EZC100N3075**	**EZC100N4075**
80 A	**EZC100N1080**	**EZC100N3080**	**EZC100N4080**
100 A	**EZC100N1100**	**EZC100N3100**	**EZC100N4100**

Catalogue numbers
EZC100H 30 kA (400 V AC)

PB101839-10

EZC100H-1P.

PB101840-15

EZC100H-2P.

PB101844-20

EZC100H-3P.

PB102172-27

EZC100H-4P.

EZC100H 15 to 100 A

Number of poles	**1P, 2P, 3P and 4P**
Current rating (A)	**15 - 16 - 20 - 25 - 30 - 32 - 40 - 45 - 50 - 60 - 63 - 75 - 80 - 100**

Breaking capacities (kA rms) as per IEC 60947-2, EN 60947-2, JIS C8201-2-1

		Ue (V)	Icu (kA)			Ics (% Icu)
			1P	2P	3P - 4P	1P - 2P - 3P - 4P
Ue = 550 V	AC	110/130	50	100	100	50 %
Ui = 690 V		220/230/240	**25**	50	100	50 %
Uimp = 6 kV		**380/400**	5	**30**	**30**	50 %
		415	5	**30**	**30**	25 %
		440	-	20	20	25 %
		550	-	10	10	25 %
	DC	125 (1P)	10	10	10	50 %
		250 (2P)	-	10	10	50 %

Breaking capacities (kA rms) as per NEMA-AB1

	Ue (V)	HIC (kA)		
		1P	2P	3P - 4P
AC	240	18	100	100
	277	18	-	-
	277/480	-	-	18

Rating	Cat. no.		
	1P	2P	3P
15 A	**EZC100H1015**	**EZC100H2015**	**EZC100H3015**
16 A	**EZC100H1016**	**EZC100H2016**	**EZC100H3016**
20 A	**EZC100H1020**	**EZC100H2020**	**EZC100H3020**
25 A	**EZC100H1025**	**EZC100H2025**	**EZC100H3025**
30 A	**EZC100H1030**	**EZC100H2030**	**EZC100H3030**
32 A	**EZC100H1032**	**EZC100H2032**	**EZC100H3032**
40 A	**EZC100H1040**	**EZC100H2040**	**EZC100H3040**
45 A	**EZC100H1045**	**EZC100H2045**	**EZC100H3045**
50 A	**EZC100H1050**	**EZC100H2050**	**EZC100H3050**
60 A	**EZC100H1060**	**EZC100H2060**	**EZC100H3060**
63 A	**EZC100H1063**	**EZC100H2063**	**EZC100H3063**
75 A	**EZC100H1075**	**EZC100H2075**	**EZC100H3075**
80 A	**EZC100H1080**	**EZC100H2080**	**EZC100H3080**
100 A	**EZC100H1100**	**EZC100H2100**	**EZC100H3100**

Rating	Cat. no.
	4P 3t
15 A	**EZC100H4015**
16 A	**EZC100H4016**
20 A	**EZC100H4020**
25 A	**EZC100H4025**
30 A	**EZC100H4030**
32 A	**EZC100H4032**
40 A	**EZC100H4040**
45 A	**EZC100H4045**
50 A	**EZC100H4050**
60 A	**EZC100H4060**
63 A	**EZC100H4063**
75 A	**EZC100H4075**
80 A	**EZC100H4080**
100 A	**EZC100H4100**

Catalogue numbers
EZC250F 18 kA (400 V AC)
EZC250N 25 kA (400 V AC)

PB101845-29

EZC250F 100 to 250 A				
Number of poles		**3P**		
Current rating (A)		**100 - 125 - 150 - 160 - 175 - 200 - 225 - 250**		
Breaking capacities (kA rms) as per IEC 60947-2, EN 60947-2, JIS C8201-2-1				
		Ue (V)	**Icu (kA)**	**Ics (% Icu)**
Ue = 550 V	AC	220/230/240	25	50 %
Ui = 690 V		**380/400/415**	**18**	50 %
Uimp = 6 kV		440	15	50 %
		550	5	50 %
	DC	125 (1P)	5	50 %
		250 (2P)	5	50 %
Breaking capacities (kA rms) as per NEMA-AB1				
		Ue (V)	**HIC (kA)**	
	AC	240	25	
		277/480	15	
Rating		**Cat. no.**		
100 A		**EZC250F3100**		
125 A		**EZC250F3125**		
150 A		**EZC250F3150**		
160 A		**EZC250F3160**		
175 A		**EZC250F3175**		
200 A		**EZC250F3200**		
225 A		**EZC250F3225**		
250 A		**EZC250F3250**		

PB101847-28

EZC250N 100 to 250 A				
Number of poles		**3P**		
Current rating (A)		**100 - 125 - 150 - 160 - 175 - 200 - 225 - 250**		
Breaking capacities (kA rms) as per IEC 60947-2, EN 60947-2, JIS C8201-2-1				
		Ue (V)	**Icu (kA)**	**Ics (% Icu)**
Ue = 550 V	AC	220/230/240	50	50 %
Ui = 690 V		**380/400/415**	**25**	50 %
Uimp = 6 kV		440	20	50 %
		550	8	50 %
	DC	125 (1P)	20	50 %
		250 (2P)	20	50 %
Breaking capacities (kA rms) as per NEMA-AB1				
		Ue (V)	**HIC (kA)**	
	AC	240	50	
		277/480	18	
Rating		**Cat. no.**		
100 A		**EZC250N3100**		
125 A		**EZC250N3125**		
150 A		**EZC250N3150**		
160 A		**EZC250N3160**		
175 A		**EZC250N3175**		
200 A		**EZC250N3200**		
225 A		**EZC250N3225**		
250 A		**EZC250N3250**		

Catalogue numbers
EZC250H 36 kA (400 V AC)

PB101846-29

EZC250H-2P.

PB101848-29

EZC250H-3P.

EZC250H 100 to 250 A					
Number of poles		**2P and 3P**			
Current rating (A)		**100 - 125 - 150 - 160 - 175 - 200 - 225 - 250**			
Breaking capacities (kA rms) as per IEC 60947-2, EN 60947-2, JIS C8201-2-1					
		Ue (V)	**Icu (kA)**		**Ics (% Icu)**
			2P	**3P**	
Ue = 550 V	AC	220/230/240	85	85	50 %
Ui = 690 V		**380/400/415**	**36**	**36**	50 %
Uimp = 6 kV		440	25	25	50 %
		550	10	10	50 %
	DC	125 (1P)	30	30	50 %
		250 (2P)	30	30	50 %
Breaking capacities (kA rms) as per NEMA-AB1					
		Ue (V)	**HIC (kA)**		
			2P	**3P**	
	AC	240	85	85	
		277/480	-	25	
Rating		**Cat. no.**			
		2P		**3P**	
100 A		**EZC250H2100**		**EZC250H3100**	
125 A		**EZC250H2125**		**EZC250H3125**	
150 A		**EZC250H2150**		**EZC250H3150**	
160 A		**EZC250H2160**		**EZC250H3160**	
175 A		**EZC250H2175**		**EZC250H3175**	
200 A		**EZC250H2200**		**EZC250H3200**	
225 A		**EZC250H2225**		**EZC250H3225**	
250 A		**EZC250H2250**		**EZC250H3250**	

Catalogue numbers
EZC250N 25 kA (400 V AC)
EZC250H 36 kA (400 V AC)

EZC250N 63 A to 250 A

Number of poles		**4P**		
Current rating (A)		**63 - 80 - 100 - 125 - 150 - 160 - 175 - 200 - 225 - 250**		
Breaking capacities (kA rms) as per IEC 60947-2, EN 60947-2, JIS C8201-2-1				
		Ue (V)	**Icu (kA)**	**Ics (% Icu)**
Ue = 550 V	AC	220/230/240	50	50 %
Ui = 690 V		**380/400/415**	**25**	50 %
Uimp = 6 kV		440	20	50 %
		550	8	50 %
	DC	125 (1P)	20	50 %
		250 (2P)	20	50 %
Breaking capacities (kA rms) as per NEMA-AB1				
		Ue (V)	**HIC (kA)**	
	AC	240	50	
		277/480	18	

Rating	**Cat. no.**	
	4P 3t	**4P 4t**
63 A	**EZC250N4063**	**EZC250N44063**
80 A	**EZC250N4080**	**EZC250N44080**
100 A	**EZC250N4100**	**EZC250N44100**
125 A	**EZC250N4125**	**EZC250N44125**
150 A	**EZC250N4150**	**EZC250N44150**
160 A	**EZC250N4160**	**EZC250N44160**
175 A	**EZC250N4175**	**EZC250N44175**
200 A	**EZC250N4200**	**EZC250N44200**
225 A	**EZC250N4225**	**EZC250N44225**
250 A	**EZC250N4250**	**EZC250N44250**

EZC250H 63 A to 250 A

Number of poles		**4P**		
Current rating (A)		**63 - 80 - 100 - 125 - 150 - 160 - 175 - 200 - 225 - 250**		
Breaking capacities (kA rms) as per IEC 60947-2, EN 60947-2, JIS C8201-2-1				
		Ue (V)	**Icu (kA)**	**Ics (% Icu)**
Ue = 550 V	AC	220/230/240	85	50 %
Ui = 690 V		**380/400/415**	**36**	50 %
Uimp = 6 kV		440	25	50 %
		550	10	50 %
	DC	125 (1P)	30	50 %
		250 (2P)	30	50 %
Breaking capacities (kA rms) as per NEMA-AB1				
		Ue (V)	**HIC (kA)**	
	AC	240	85	
		277/480	25	

Rating	**Cat. no.**	
	4P 3t	**4P 4t**
63 A	**EZC250H4063**	**EZC250H44063**
80 A	**EZC250H4080**	**EZC250H44080**
100 A	**EZC250H4100**	**EZC250H44100**
125 A	**EZC250H4125**	**EZC250H44125**
150 A	**EZC250H4150**	**EZC250H44150**
160 A	**EZC250H4160**	**EZC250H44160**
175 A	**EZC250H4175**	**EZC250H44175**
200 A	**EZC250H4200**	**EZC250H44200**
225 A	**EZC250H4225**	**EZC250H44225**
250 A	**EZC250H4250**	**EZC250H44250**

Catalogue numbers
EZCV250N 25 kA (400 V AC)
EZCV250H 36 kA (400 V AC)

PB101850-26

EZCV250N-3P.

PB101854-38

EZCV250N-4P.

EZCV250N 63 A to 250 A

Number of poles		**3P and 4P**		
Current rating (A)		**63 - 80 - 100 - 125 - 150 - 160 - 175 - 200 - 225 - 250**		
Breaking capacities (kA rms) as per IEC 60947-2, EN 60947-2, JIS C8201-2-1/C8201-2-2				
		Ue (V)	**Icu (kA)**	**Ics (% Icu)**
Ue = 440 V	AC	220/230/240	85	50 %
Ui = 440 V		**380/400/415**	**25**	50 %
Uimp = 6 kV		440	20	50 %
Breaking capacities (kA rms) as per NEMA-AB1				
		Ue (V)	**HIC (kA)**	
	AC	240	50	
Earth-leakage characteristics				
Sensitivity IΔn (A)			adjustable 0.1/0.3/0.5/1	
Time delay	Intentional delay (ms)		adjustable 0/200/500/1000	
	Max. breaking time (s)		0.15/0.4/1/2	

Rating	**Cat. no.**		
	3P	**4P 3t**	**4P 4t**
63 A	**EZCV250N3063**	**EZCV250N4063**	**EZCV250N44063**
80 A	**EZCV250N3080**	**EZCV250N4080**	**EZCV250N44080**
100 A	**EZCV250N3100**	**EZCV250N4100**	**EZCV250N44100**
125 A	**EZCV250N3125**	**EZCV250N4125**	**EZCV250N44125**
150 A	**EZCV250N3150**	**EZCV250N4150**	**EZCV250N44150**
160 A	**EZCV250N3160**	**EZCV250N4160**	**EZCV250N44160**
175 A	**EZCV250N3175**	**EZCV250N4175**	**EZCV250N44175**
200 A	**EZCV250N3200**	**EZCV250N4200**	**EZCV250N44200**
225 A	**EZCV250N3225**	**EZCV250N4225**	**EZCV250N44225**
250 A	**EZCV250N3250**	**EZCV250N4250**	-

PB101851-28

EZCV250H-3P.

PB101855-36

EZCV250H-4P.

EZCV250H 63 A to 250 A

Number of poles		**3P and 4P**		
Current rating (A)		**63 - 80 - 100 - 125 - 150 - 160 - 175 - 200 - 225 - 250**		
Breaking capacities (kA rms) as per IEC 60947-2, EN 60947-2, JIS C8201-2-1/C8201-2-2				
		Ue (V)	**Icu (kA)**	**Ics (% Icu)**
Ue = 440 V	AC	220/230/240	100	50 %
Ui = 440 V		**380/400/415**	**36**	50 %
Uimp = 6 kV		440	25	50 %
Breaking capacities (kA rms) as per NEMA-AB1				
		Ue (V)	**HIC (kA)**	
	AC	240	85	
Earth-leakage characteristics				
Sensitivity IΔn (A)			adjustable 0.1/0.3/0.5/1	
Time delay	Intentional delay (ms)		adjustable 0/200/500/1000	
	Max. breaking time (s)		0.15/0.4/1/2	

Rating	**Cat. no.**		
	3P	**4P 3t**	**4P 4t**
63 A	**EZCV250H3063**	**EZCV250H4063**	**EZCV250H44063**
80 A	**EZCV250H3080**	**EZCV250H4080**	**EZCV250H44080**
100 A	**EZCV250H3100**	**EZCV250H4100**	**EZCV250H44100**
125 A	**EZCV250H3125**	**EZCV250H4125**	**EZCV250H44125**
150 A	**EZCV250H3150**	**EZCV250H4150**	**EZCV250H44150**
160 A	**EZCV250H3160**	**EZCV250H4160**	**EZCV250H44160**
175 A	**EZCV250H3175**	**EZCV250H4175**	**EZCV250H44175**
200 A	**EZCV250H3200**	**EZCV250H4200**	**EZCV250H44200**
225 A	**EZCV250H3225**	**EZCV250H4225**	**EZCV250H44225**
250 A	**EZCV250H3250**	**EZCV250H4250**	-

Catalogue numbers
EZC400N 36 kA (400 V AC)
EZC400H 50 kA (400 V AC)

PB102114-28

EZC400N-3P.

PB102115-36

EZC400N-4P.

EZC400N 250 A to 400 A

Number of poles		**3P and 4P**		
Current rating (A)		**250 - 300 - 320 - 350 - 400**		
Breaking capacities (kA rms) as per IEC 60947-2, EN 60947-2, JIS C8201-2-1				
		Ue (V)	**Icu (kA)**	**Ics (% Icu)**
Ue = 550 V	AC	220/230/240	85	50 %
Ui = 690 V		**380/400/415**	**36**	50 %
Uimp = 8 kV		440	36	50 %
		550	15	50 %
	DC	250 (2P)	20	50 %
Breaking capacities (kA rms) as per NEMA-AB1				
		Ue (V)	**HIC (kA)**	
	AC	240	50	
		277/480	25	

Rating	**Cat. no.**		
	3P	**4P 3t**	**4P 4t**
250 A	**EZC400N3250**	**EZC400N4250**	**EZC400N44250**
300 A	**EZC400N3300**	**EZC400N4300**	**EZC400N44300**
320 A	**EZC400N3320**	**EZC400N4320**	**EZC400N44320**
350 A	**EZC400N3350**	**EZC400N4350**	**EZC400N44350**
400 A	**EZC400N3400**	**EZC400N4400**	**EZC400N44400**

PB102114-28

EZC400H-3P.

PB102115-36

EZC400H-4P.

EZC400H 250 A to 400 A

Number of poles		**3P and 4P**		
Current rating (A)		**250 - 300 - 320 - 350 - 400**		
Breaking capacities (kA rms) as per IEC 60947-2, EN 60947-2, JIS C8201-2-1				
		Ue (V)	**Icu (kA)**	**Ics (% Icu)**
Ue = 550 V	AC	220/230/240	100	50 %
Ui = 690 V		380	50	50 %
Uimp = 8 kV		**400/415**	**50**	50 %
		440	50	50 %
		550	20	50 %
	DC	250 (2P)	40	50 %
Breaking capacities (kA rms) as per NEMA-AB1				
		Ue (V)	**HIC (kA)**	
	AC	240	85	
		277/480	35	

Rating	**Cat. no.**		
	3P	**4P 3t**	**4P 4t**
250 A	**EZC400H3250**	**EZC400H4250**	**EZC400H44250**
300 A	**EZC400H3300**	**EZC400H4300**	**EZC400H44300**
320 A	**EZC400H3320**	**EZC400H4320**	**EZC400H44320**
350 A	**EZC400H3350**	**EZC400H4350**	**EZC400H44350**
400 A	**EZC400H3400**	**EZC400H4400**	**EZC400H44400**

Electrical and mechanical accessories overview
EasyPact EZC100

EasyPact circuit breaker EZC100 comes with a full range of accessories to fulfill different application requirements and make it easy for the end-user.

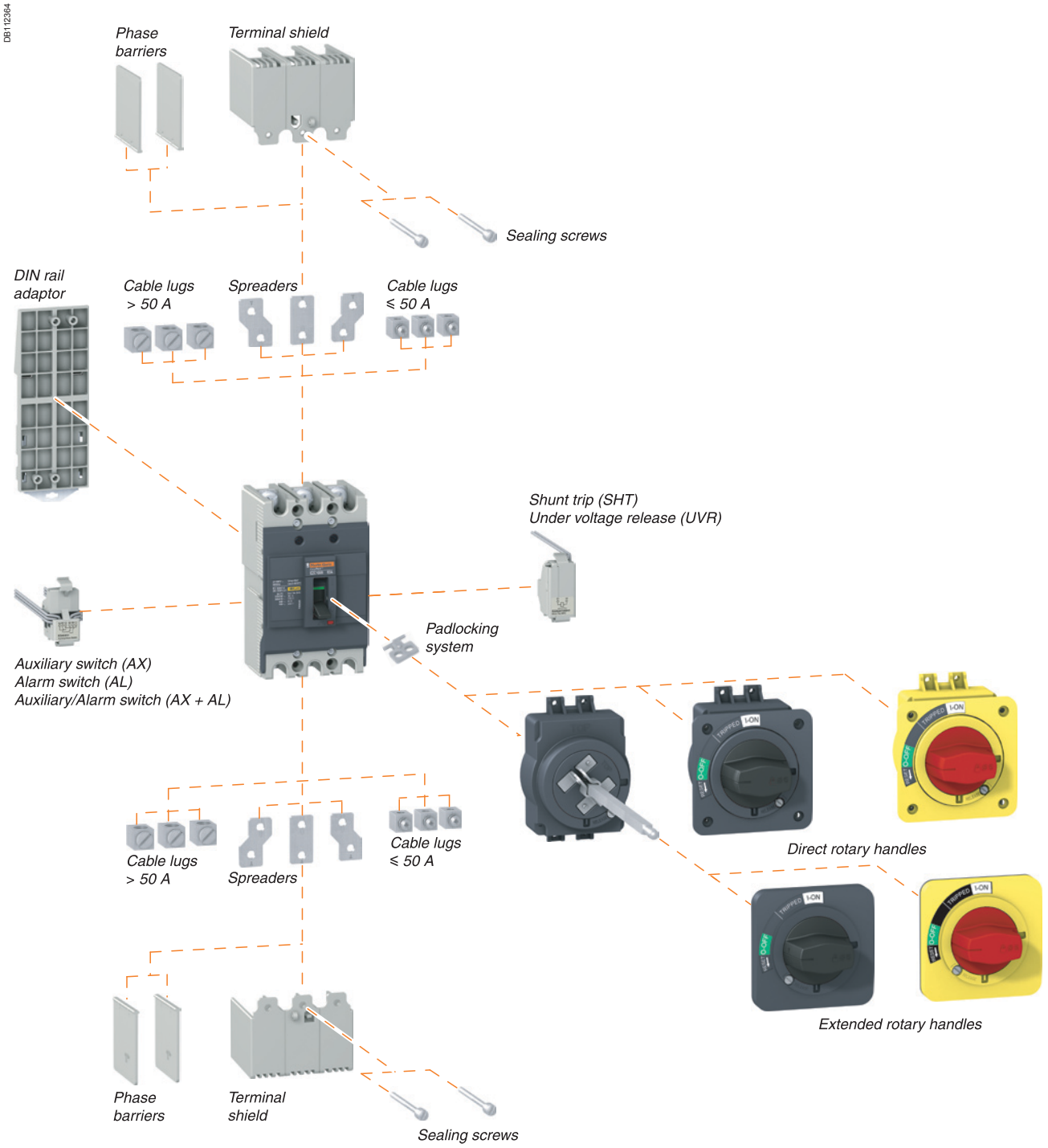

Electrical and mechanical accessories overview
EasyPact EZC250

EasyPact circuit breaker EZC250 comes with a full range of accessories to fulfill different application requirements and make it easy for the end-user.

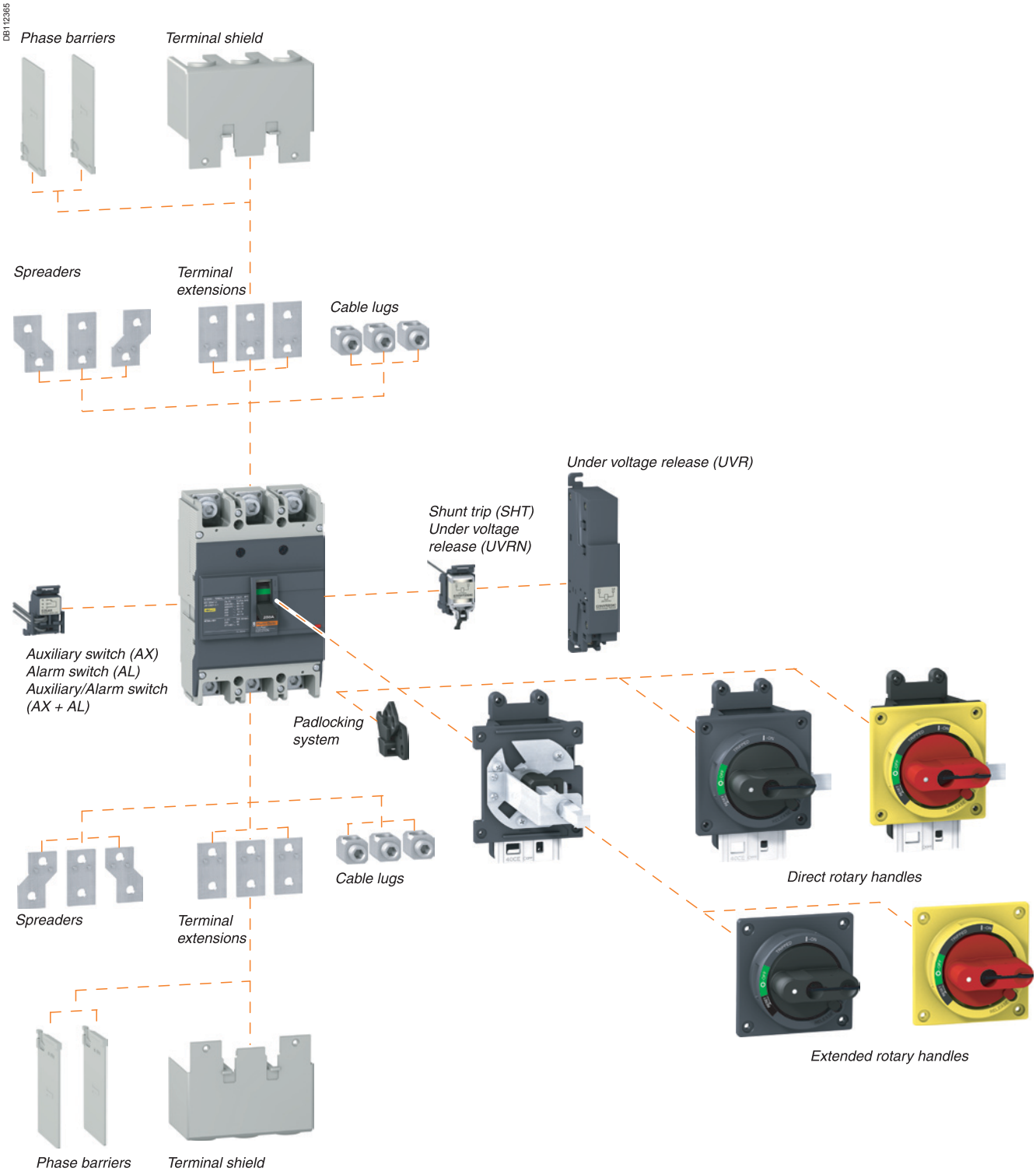

Electrical and mechanical accessories overview
EasyPact EZCV250

EasyPact circuit breaker EZCV250 comes with a full range of accessories to fulfill different application requirements and make it easy for the end-user.

DB112366

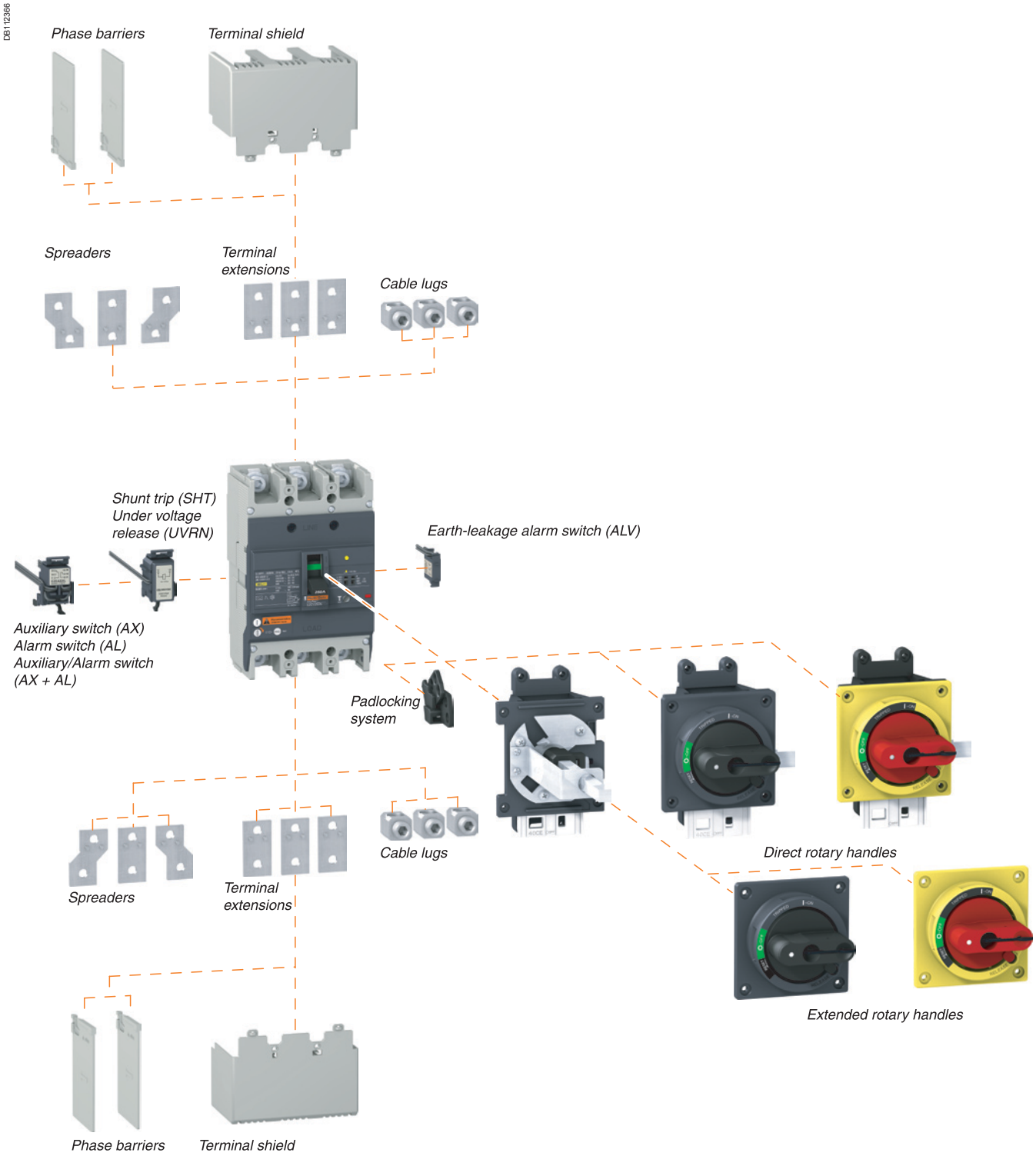

Electrical and mechanical accessories overview
EasyPact EZC400

EasyPact circuit breaker EZC400 comes with a full range of accessories to fulfill different application requirements and make it easy for the end-user.

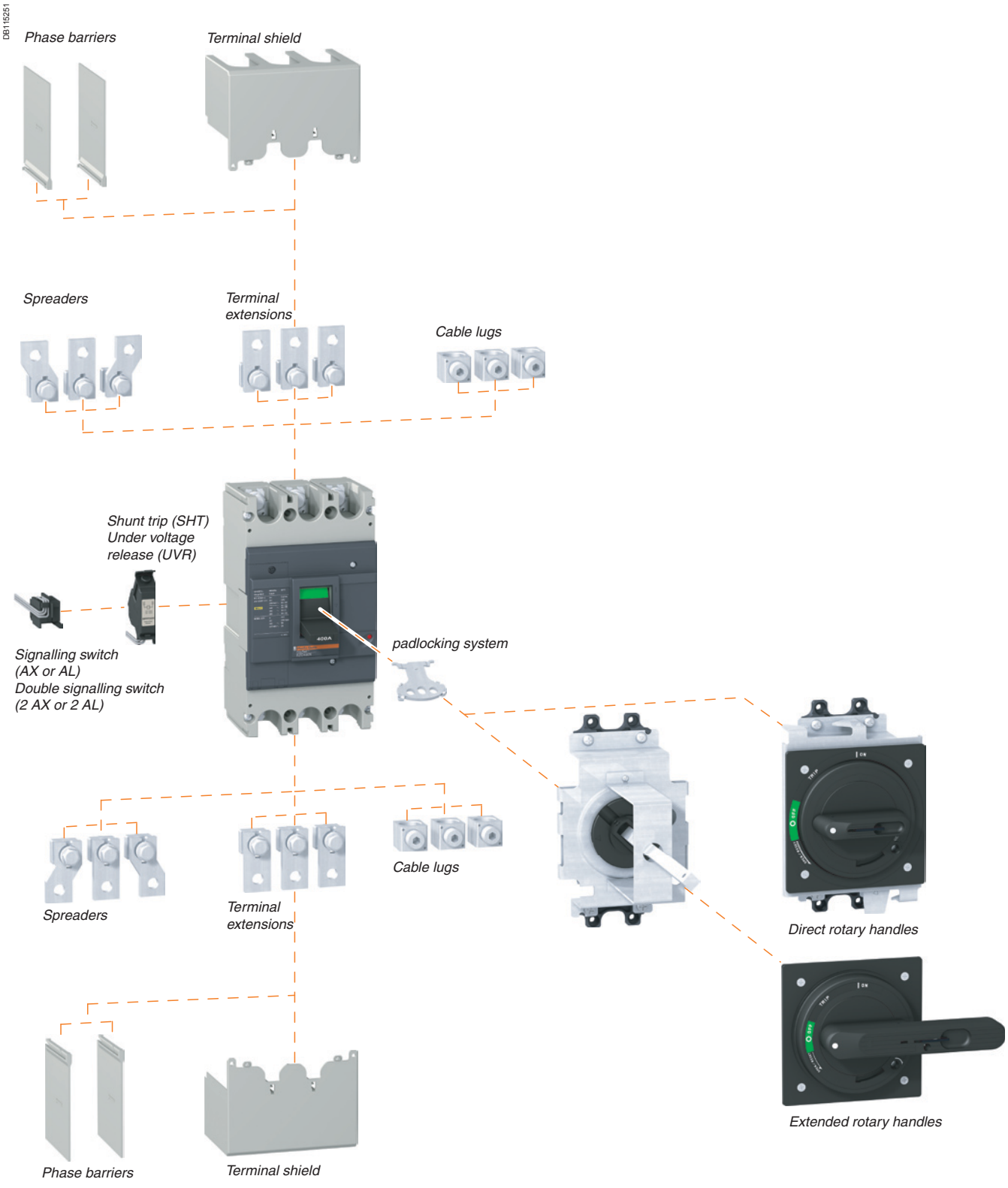

Electrical auxiliaries 100-250AF
AX - AL - AXAL - ALV

EZC100.

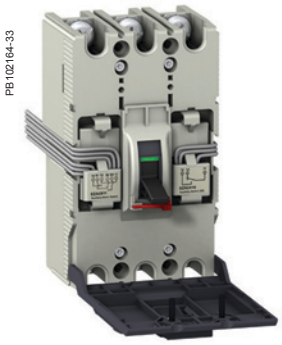

AXAL and AX electrical auxiliaries on EZC100.

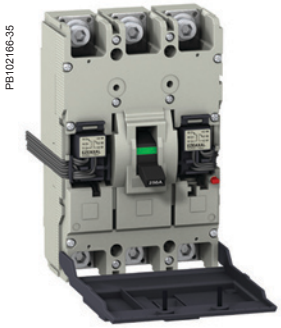

AXAL electrical auxiliaries on EZC250.

AXAL, AX and ALV electrical auxiliaries on EZCV250.

Plug-in location: AX - AL - AXAL - ALV

EZC100

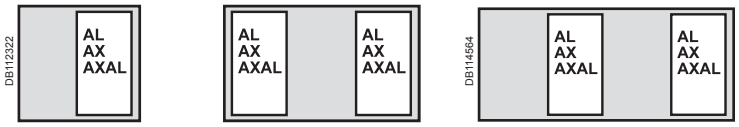

EZC100-2P. *EZC100-3P.* *EZC100-4P.*

EZC250

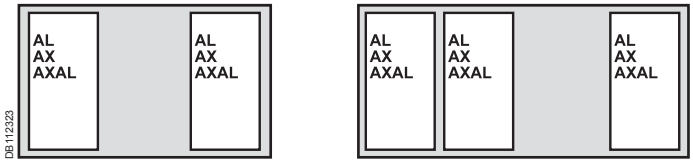

EZC250-3P. *EZC250-4P.*

EZCV250

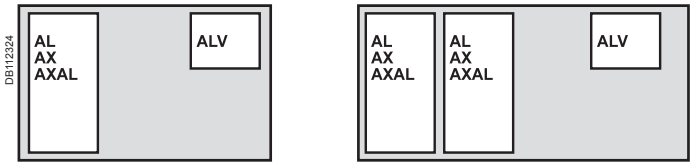

EZCV250-3P. *EZCV250-4P.*

Indication contacts

Provide remote circuit breaker status information.
They can be used for indications, electrical locking, relaying, etc.
Common-point changeover contacts.

Auxiliary switch (ON/OFF)
AX indicates the position of the circuit breaker contacts.

Alarm switch (trip indication)
- ■ AL indicates that the circuit breaker has tripped due to:
  - □ an overload
  - □ a short-circuit
  - □ operation of a voltage release.
- ■ ALV indicates that the circuit breaker has tripped due to an of earth-leakage fault.

They return to de-energised state when the circuit breaker is reset.

Characteristics

Contacts					
Rated thermal current (A)		5			
Minimum load		10 mA at 24 V			
Utilisation category (IEC 60947-5-1)		AC12	AC15	DC12	DC14
Operational current (A)	24 V	5	5	4	3
	48 V	5	5	2.5	1
	125 V	5	3	0.4	0.4
	250 V	3	2	0.2	0.2
Connections					
Connection wire length		450 mm			
Cross-section		EZC100: 1 mm²,			
		EZC250/EZCV250: 1.5 mm²			

Electrical auxiliaries 100-250AF
AX - AL - AXAL - ALV (cont.)

PB101862-21

Auxiliary switch (AX) EZAUX10.

PB101876-21

Auxiliary switch (AX) EZEAX.

PB101893-28

Earth-leakage alarm switch (ALV).

DB112376

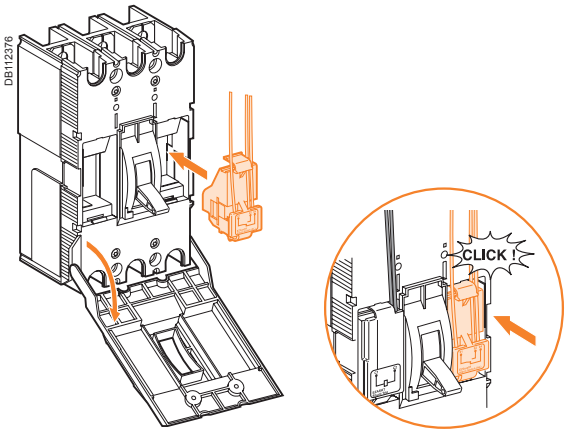

All EasyPact electrical auxiliaires are “snapped in place”

Designation	Cat. no.	
	EZC100	**EZC250/EZCV250**
Auxiliary switch (AX)	**EZAUX10**	**EZEAX**
Alarm switch (AL)	**EZAUX01**	**EZEAL**
Auxiliary/Alarm switch (AXAL)	**EZAUX11**	**EZEAXAL**
Earth-leakage alarm switch (ALV)	**-**	**EZEALV** (1)

***(1)** only EZCV250.*

Electrical auxiliaries 100-250AF
SHT - UVR - UVRN

PB101896-35

EZC250.

PB102165-35

SHT and UVR releases on EZC100.

PB102167-35

SHT and UVR releases on EZC250.

PB102163-39

UVRN release on EZCV250.

Plug-in location : SHT - UVR - UVRN

EZC100

DB112325

EZC100-2P.

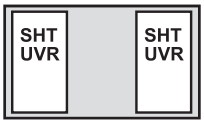

EZC100-3P.

DB114565

EZC100-4P.

EZC250

DB112326

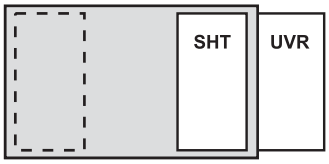

EZC250-3P.

EZC250-4P.

EZCV250

DB112327

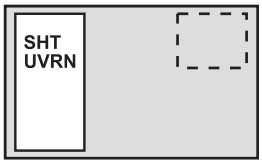

EZCV250-3P.

EZCV250-4P.

Remote tripping

Shunt Trip (SHT) or Under Voltage Release (UVR/UVRN).

Shunt Trip (SHT)

- This release trips the circuit breaker when the control voltage rises above 0.7 x Un
- Control signals can be of the impulse type (⩾ 20 ms) or maintained.

Under Voltage Release (UVR/UVRN)

- This release trips the circuit breaker when the control voltage drops below a tripping threshold
- Tripping threshold between 0.35 and 0.7 times the rated voltage
- Circuit breaker closing is possible only if the voltage exceeds 0.85 times the rated voltage.

Operation

When the circuit breaker has been tripped by an SHT or UVR/UVRN release, it must be reset locally:

- SHT or UVR/UVRN tripping takes priority over manual closing
- in the presence of a standing trip order, closing of the contacts, even temporary, is not possible.

Circuit breaker tripping by an SHT/UVR/UVRN release meets the requirements of standard IEC 60947-2.

Characteristics

Mechanical				
Mechanical endurance		10 % of MCCB mechnical endurance		
Electrical		**EZC100**	**EZC250/EZCV250**	
		AC/DC	**AC**	**DC**
SHT	pick-up consumption	< 30 VA	< 30 VA	< 35 W
	response time	< 50 ms	< 50 ms	< 100 ms
UVR	seal-in consumption	< 5 VA	< 5 VA	< 10 W
	response time	< 50 ms	< 50 ms	< 100 ms
UVRN	seal-in consumption	< 5 VA	< 5 VA	< 10 W
	response time	< 50 ms	< 50 ms	< 100 ms
Connections		**EZC100**	**EZC250/EZCV250**	
SHT		pre-wired (1 mm²)	pre-wired (0.5 mm²)	
UVR		pre-wired (1 mm²)	screws (< 2 mm²)	
UVRN		pre-wired (1 mm²)	pre-wired (0.5 mm²)	

Electrical auxiliaries 100-250AF
SHT - UVR - UVRN (cont.)

PB101865-16

Shunt Trip EZASHT.

PB101879-18

Shunt Trip EZESHT.

PB101866-18

Under Voltage Release EZAUVR.

PB101894-27

Under Voltage Release EZEUVRN.

PB1018880-15

Under Voltage Release EZEUVR.

Installation

- ■ EZC100 SHT and UVR: internal mounting
- ■ EZC250/EZCV250:
- □ SHT: internal mounting
- □ UVR: external mounting
- □ UVRN: internal mounting

Designation			Cat. no.		
			EZC100		EZC250/EZCV250
SHT Shunt trip release	AC	100-130 V	**EZASHT100AC**	110-120 V	**EZESHT100AC**
				120-130 V	**EZESHT120AC**
		200-277 V	**EZASHT200AC**	200-240 V	**EZESHT200AC**
				277 V	**EZESHT277AC**
		380-480 V	**EZASHT380AC**	380-440 V	**EZESHT400AC**
				440-480 V	**EZESHT440AC**
	DC	24 V	**EZASHT024AC**		**EZESHT024DC**
		48 V	**EZASHT048AC**		**EZESHT048DC**
UVRN Under voltage release (only EZC250-4P and EZCV250-3/4P)	AC	110-130 V	-		**EZEUVRN110AC**
		200-240 V	-		**EZEUVRN200AC**
		277 V	-		**EZEUVRN277AC**
		380-415 V	-		**EZEUVRN400AC**
		440-480 V	-		**EZEUVRN440AC**
	DC	24 V	-		**EZEUVRN024DC**
		48 V	-		**EZEUVRN048DC**
		125 V	-		**EZEUVRN125DC**
UVR Under voltage release	AC	110-130 V	**EZAUVR110AC**		**EZEUVR110AC**
		200-240 V	**EZAUVR200AC**		**EZEUVR200AC**
		277 V	**EZAUVR277AC**		**EZEUVR277AC**
		380-415 V	**EZAUVR380AC**		**EZEUVR400AC**
		440-480 V	**EZAUVR440AC**		**EZEUVR440AC**
	DC	24 V	**EZAUVR024DC**		**EZEUVR024DC**
		48 V	**EZAUVR048DC**		**EZEUVR048DC**
		125 V	**EZAUVR125DC**		**EZEUVR125DC**

Direct rotary handle 100-250AF

Direct rotary handle (black) for EZC100.

Direct rotary handle (red/yellow) for EZC100.

Direct rotary handle (black) for EZC250/EZCV250.

Direct rotary handle (red/yellow) for EZC250/EZCV250.

Direct rotary handle

Suitable for Motor Control Centre (MCC) switchboards.

■ Degree of protection IP40 or IP54, IK07 (IP54 with gasket supplied).

■ The direct rotary handle maintains:
□ suitability for isolation
□ indication of the three positions O (OFF), I (ON) and tripped
□ circuit breaker locking capability in the OFF position by one to three padlocks, (padlock not supplied) shackle diameter Ø 5 for EZC100, Ø 8 for EZC250/EZCV250
□ door opening disabled when the circuit breaker is ON
□ circuit breaker closing is disabled if the door is open.

IP40 or IP54

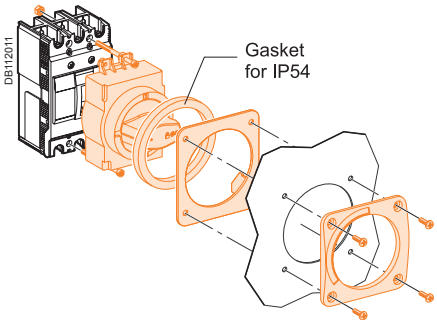

EZC100.

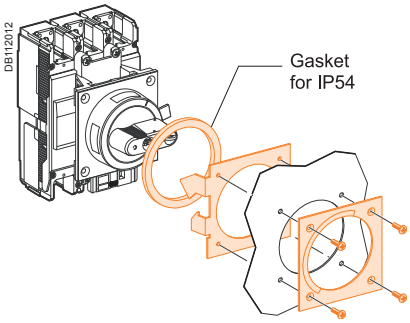

EZC250/EZCV250.

Padlocking

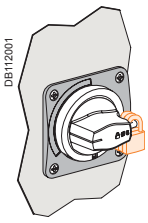

EZC100.

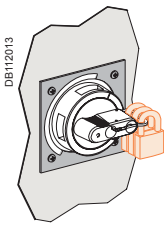

EZC250/EZCV250.

Designation	Cat. no.	
	EZC100	EZC250/EZCV250
Direct rotary handle (black)	EZAROTDS	EZEROTDS
Direct rotary handle (red/yellow)	EZAROTDSRY	EZEROTDSRY

Extended rotary handle 100-250AF

Extended rotary handle (black) for EZC100.

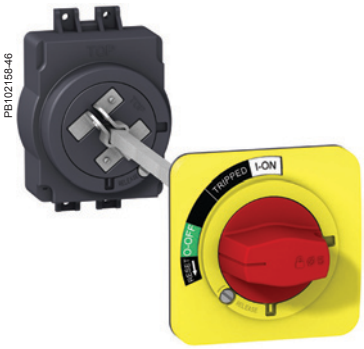

Extended rotary handle (red/yellow) for EZC100.

Extended rotary handle (black) for EZC250/EZCV250.

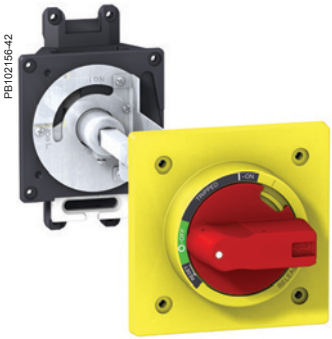

Extended rotary handle (red/yellow) for EZC250/EZCV250.

Extended rotary handle

Makes possible to operate circuit breakers installed at the back of switchboards, from the switchboard front.

■ Degree of protection IP40 or IP54, IK08 (IP54 with gasket supplied).

■ The extended rotary handle maintains:
□ suitability for isolation
□ indication of the three positions O (OFF), I (ON) and tripped
□ circuit breaker locking capability in the OFF position by one to three padlocks, (padlock not supplied) shackle diameter: Ø 5 for EZC100, Ø 8 for EZC250/EZCV250
□ door opening disabled when the circuit breaker is ON.

■ The extended rotary handle is made up of:
□ a unit on the front cover of the circuit breaker (secured by screws)
□ an assembly (handle and front plate) on the door that is always secured in the same position, whether the circuit breaker is installed vertically or horizontally
□ an extension shaft that must be adjusted to the distance between back of circuit breaker and door.

IP40 or IP54

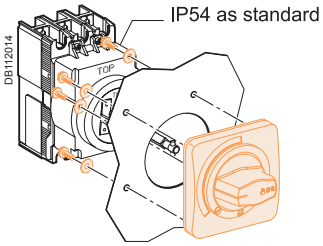

EZC100.

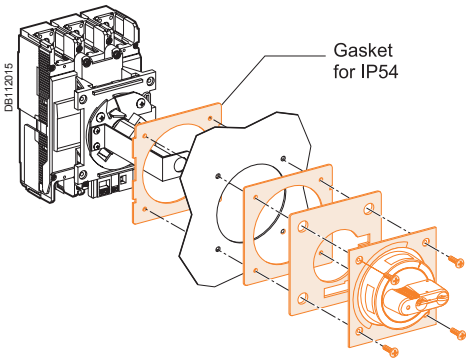

EZC250/EZCV250.

Padlocking

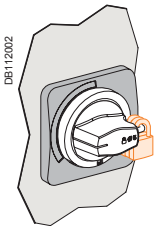

EZC100.

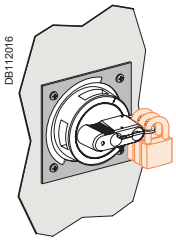

EZC250/EZCV250.

Designation	Cat. no.	
	EZC100	EZC250/EZCV250
Extended rotary handle (black)	EZAROTE	EZEROTE
Extended rotary handle (red/yellow)	EZAROTERY	EZEROTERY

Power connections and cable lugs 100-250AF

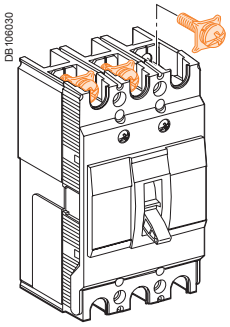

Standard circuit breaker terminals

All EasyPact circuit breakers are supplied with terminal screws

EZC100 15 to 50 A — Screw M5

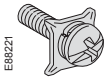

EZC100 60 to 100 A — Screw M8

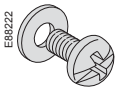

EZC250/EZCV250 63 to 250 A — Screw M8

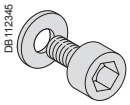

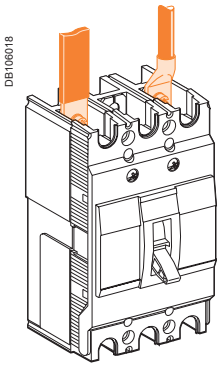

Connection of insulated bars or cables with lugs

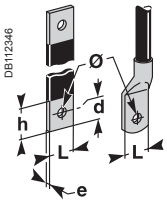

			EZC100	EZC250/ EZCV250
Bars	L (mm)		≤ 17	≤ 25
	h (mm)		d + 10	d + 10
	d (mm)		≤ 7	≤ 8
	e (mm)		≤ 6	≤ 6
	Ø (mm)	≤ 50 A	5.5	-
		> 50 A	8.5	9
Crimp lugs	L (mm)		≤ 17	≤ 25
	d (mm)		≤ 9	≤ 8
	Ø (mm)	≤ 50 A	5.5	-
		> 50 A	8.5	9
Tightening torque	≤ 50 A		2 N.m	-
	> 50 A		5.5 N.m	13 N.m

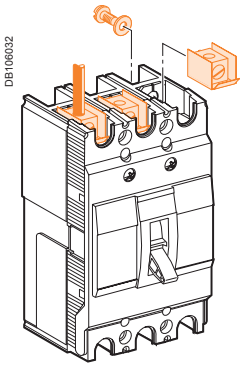

Cable lugs

Cable lugs directly screwed on standard circuit breaker terminals.

≤ 50 A (EZC100)	> 50 A (EZC100)	≥ 100 A (EZC250/EZCV250)
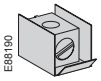	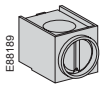	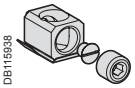
Cables from 2.5 to 16 mm².	Cables from 10 to 50 mm².	Cables from 42.2 to 150 mm².

Designation	Cat. no.	
	EZC100	EZC250/EZCV250
Cable lug up to 50 A (set of 2)	EZALUG0502	-
Cable lug up to 50 A (set of 3)	EZALUG0503	-
Cable lug from 60 A up to 100 A (set of 2)	EZALUG1002	-
Cable lug from 60 A up to 100 A (set of 3)	EZALUG1003	-
Cable lug from 100 A up to 250 A (set of 3)	-	EZELUG2503
Cable lug from 100 A up to 250 A (set of 4)	-	EZELUG2504

Power connections and insulation of live parts 100-250AF

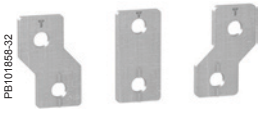

Spreader.

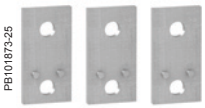

Terminal extensions.

Spreaders

Increase the pitch of the circuit breaker terminals:
- EZC100 from 25 mm to 35 mm
- EZC250/EZCV250 from 35 mm to 45 mm.

Terminal extensions

Additional terminal extensions are available for EZC250/EZCV250.

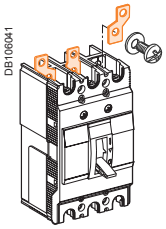

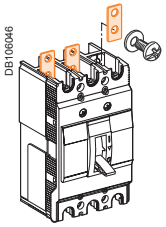

Designation	Cat. no.	
	EZC100	EZC250/EZCV250
Spreaders for 3-pole breaker (set of 3)	EZASPDR3P	EZESPDR3P
Spreaders for 4-pole breaker (set of 4)	EZASPDR4P	EZESPDR4P
Terminal extension for 3-pole breaker (set of 3)	-	EZETEX
Terminal extension for 4-pole breaker (set of 4)	-	EZETEX4P

Phase barriers for EZC100.

Phase barriers for EZC250/ EZCV250.

Phase barriers

- Safety accessories for maximum insulation at the power connection points
- Usable with all other connection accessories, except terminal shields
- Each breaker is delivered with a set of phase barriers (1 for 2 poles, 2 for 3 poles and 3 for 4 poles breaker)
- Additional set of phase barriers available for insulation between outgoings or between 2 side by side mounted breakers.

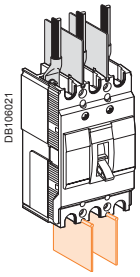

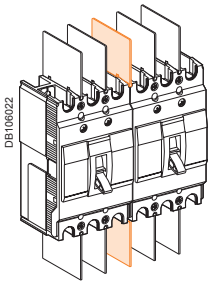

Designation	Cat. no.	
	EZC100	EZC250/EZCV250
Phase barriers for 60 mm depht (set of 2)	EZAFASB2	EZEFASB2
Phase barriers for 68 mm depht (set of 3)	-	EZEFASB3N

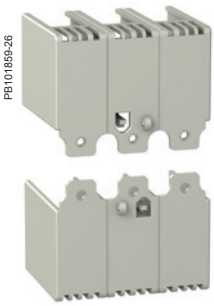

Terminal shield for EZC100.

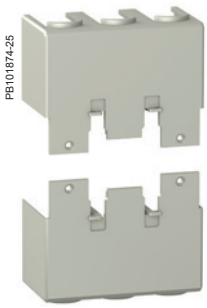

Terminal shield for EZC250/EZCV250.

Terminal shields

- Insulating accessories for protection against direct contact with power circuits
- Designed for front connection only (long terminal shield).

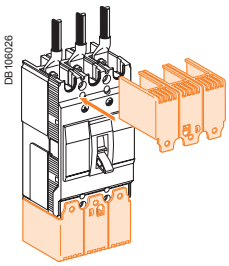

Designation	Cat. no.	
	EZC100	EZC250/EZCV250
Terminal shield 3P, 60 mm depth (set of 2)	EZATSHD3P	EZETSHD3P
Terminal shield 3P, 68 mm depth (set of 2)	-	EZETSHD3PN
Terminal shield 4P, 60 mm depth (set of 2)	EZATSHD4P	-
Terminal shield 4P, 68 mm depth (set of 2)	-	EZETSHD4PN

DIN rail adaptor, padlocking, sealing screws 100-250AF

PB101870-10

PB101917-15

DIN rail adaptor

Breaker mounting on a DIN rail is possible by using special adaptator (EZC100 only).
Number of adaptators:
- one for two 1P, or one 2P or one 3P
- two for one 4P.

DB112338

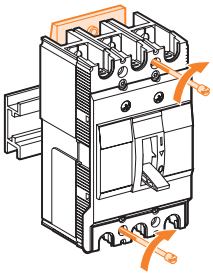

Mounting on DIN rail (optional).

Designation	Cat. no.	
	EZC100	EZC250/EZCV250
Din rail adaptor	EZADINR	-

PB101869-22

Padlocking device for EZC100.

PB101920-20

Padlocking device for EZC250/EZCV250.

Padlocking system

Locking in the OFF position guarantees isolation as per IEC 60947-2.
Padlocking system can receive:
- up to 2 padlocks Ø 5 mm (padlocks not supplied) for EZC100
- up to 3 padlocks Ø 8 mm for EZC250/EZCV250 (padlocks not supplied).

DB112339

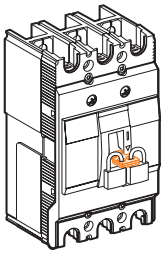

Toggle locking using a removable device: for EZC100

DB112340

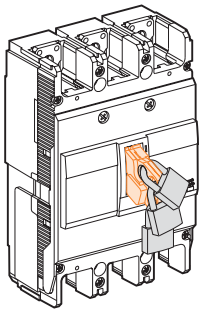

for EZC250/EZCV250

Designation	Cat. no.	
	EZC100	EZC250/EZCV250
Padlocking system	EZALOCK	-
Padlocking system for EZC250-3P	-	EZELOCK
Padlocking system for EZC250-4P and EZCV250-3/4P	-	EZELOCKN

PB101860-30

Sealing screws

DB106029

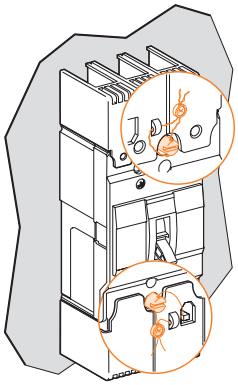

Designation	Cat. no.	
	EZC100	EZC250/EZCV250
Sealing screws (set of 2)	EZASSCR	-

Electrical auxiliaries 400AF
AX - AL

PB102136-32

PB102170-32

AX and 2 AL.

PB102128-21

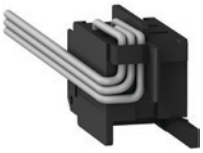

Signalling switch (AX or AL).

PB102129-21

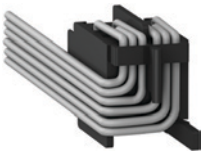

Double signalling switch (2 AX or 2 AL).

Plug-In location location: AX - AL

DB115252

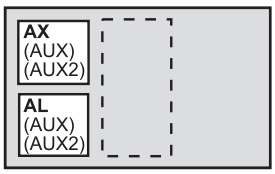

EZC400-3P.

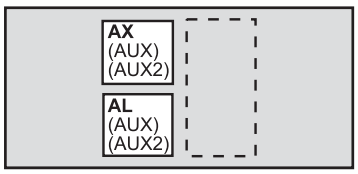

EZC400-4P.

Indication contacts

Provide remote circuit breaker status information.
They can be used for indications, electrical locking, relaying, etc.
Common-point changeover contacts.

Auxiliary switch (ON/OFF)
AX indicates the position of the circuit breaker contacts.

Alarm switch (trip indication)
AL indicates that the circuit breaker has tripped due to:
- an overload
- a short-circuit
- operation of a voltage release.

It returns to de-energised state when the circuit breaker is reset.

Functions (AL or AX) is determined by the mounting location of the auxiliary

Characteristics

Contacts					
Rated thermal current (A)		5			
Minimum load		10 mA at 24 V			
Utilisation category (IEC 60947-5-1)		AC12	AC15	DC12	DC14
Operational current (A)	24 V	5	5	4	3
	48 V	5	5	2.5	1
	125 V	5	3	0.4	0.4
	250 V	3	2	0.2	0.2
Connections					
Connection wire length		450 mm			
Cross-section		1.5 mm²			

DB112349

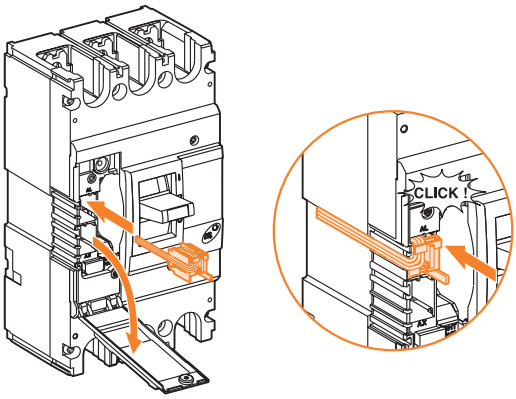

All EasyPact electrical auxiliaires are “snapped in place”

Designation	Cat. no.
Signalling switch (AX or AL)	**EZ4AUX**
Double signalling switch (2 AX or 2 AL)	**EZ4AUX2**

Electrical auxiliaries 400AF
SHT - UVR

PB102136-32

PB102169-32

SHT or UVR voltage release.

PB102130-13

Shunt Trip SHT.

PB102131-13

Shunt Trip UVR.

Plug-In location location: SHT - UVR

DB115253

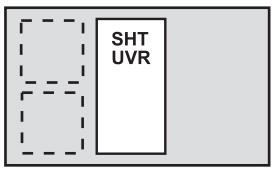

EZC400-3P.

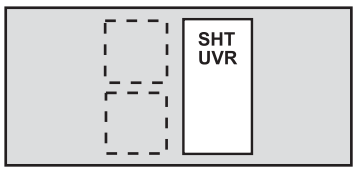

EZC400-4P.

Remote tripping
Shunt Trip (SHT) or Under Voltage Release (UVR).

Shunt Trip (SHT)
- This release trips the circuit breaker when the control voltage rises above 0.7 x Un
- Control signals can be of the impulse type (⩾ 20 ms) or maintained.

Under Voltage Release (UVR)
- This release trips the circuit breaker when the control voltage drops below a tripping threshold
- Tripping threshold between 0.35 and 0.7 times the rated voltage
- Circuit breaker closing is possible only if the voltage exceeds 0.85 times the rated voltage.

Operation
When the circuit breaker has been tripped by an SHT or UVR release, it must be reset locally:
- SHT or UVR tripping takes priority over manual closing
- in the presence of a standing trip order, closing of the contacts, even temporary, is not possible.

Circuit breaker tripping by an SHT or UVR release meets the requirements of standard IEC 60947-2.

Characteristics

Mechanical			
Mechanical endurance		10 % of MCCB mechanical endurance	
Electrical			
		AC	**DC**
SHT	pick-up consumption	< 30 VA	< 35 W
	response time	< 50 ms	< 100 ms
UVR	seal-in consumption	< 5 VA	< 10 W
	response time	< 50 ms	< 100 ms
Connections			
Connection wire length		450 mm	
Cross-section		1.5 mm²	

Installation
SHT and UVR: internal mounting

Designation			Cat. no.
SHT	AC	24-48 V	**EZ4SHT048ACDC**
Shunt Trip		100-240 V	**EZ4SHT200ACDC**
Release		277 V	**EZ4SHT277AC**
		380-480 V	**EZ4SHT400AC**
	DC	24-48 V	**EZ4SHT048ACDC**
		100-220 V	**EZ4SHT200ACDC**
UVR	AC	24 V	**EZ4UVR024ACDC**
Under Voltage		48 V	**EZ4UVR048ACDC**
Release		100-110 V	**EZ4UVR110ACDC**
		120-130 V	**EZ4UVR130ACDC**
		200-240 V	**EZ4UVR200AC**
		277 V	**EZ4UVR277AC**
		380-480 V	**EZ4UVR400AC**
	DC	24 V	**EZ4UVR024ACDC**
		48 V	**EZ4UVR048ACDC**
		125 V	**EZ4UVR130ACDC**

Direct rotary handle 400AF

Direct rotary handle

Suitable for Motor Control Centre (MCC) switchboards

- ■ Degree of protection IP50, IK07.
- ■ The direct rotary handle maintains:
- □ suitability for isolation
- □ indication of the three positions O (OFF), I (ON) and tripped
- □ circuit breaker locking capability in the OFF position by one to three padlocks, (padlock not supplied) shackle diameter Ø8
- □ door opening disabled when the circuit breaker is ON
- □ circuit breaker closing is disabled if the door is open.

IP50

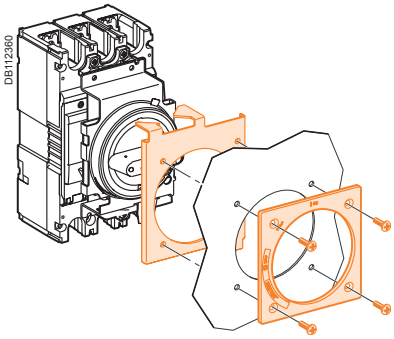

Padlocking

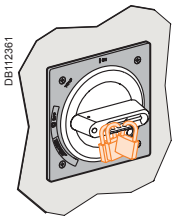

Designation	Cat. no.
Direct rotary handle	**EZ4ROTDS**

Extended rotary handle 400AF

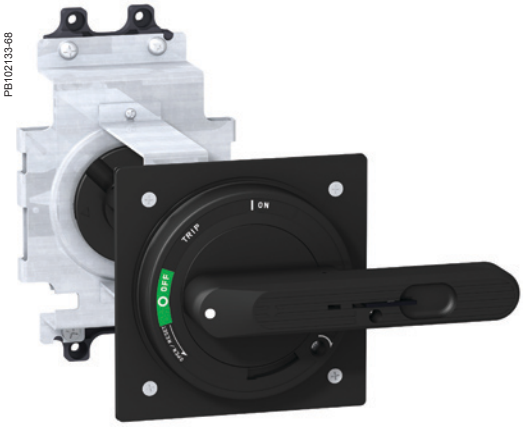

Extended rotary handle

Makes possible to operate circuit breakers installed at the back of switchboards, from the switchboard front.

■ Degree of protection IP54, IK08.
■ The extended rotary handle maintains:
□ suitability for isolation
□ indication of the three positions O (OFF), I (ON) and tripped
□ circuit breaker locking capability in the OFF position by one to three padlocks, (padlock not supplied) shackle diameter: Ø8
□ door opening disabled when the circuit breaker is ON.
■ The extended rotary handle is made up of:
□ a unit on the front cover of the circuit breaker (secured by screws)
□ an assembly (handle and front plate) on the door that is always secured in the same position, whether the circuit breaker is installed vertically or horizontally
□ an extension shaft that must be adjusted to the distance between of circuit breaker and door.

IP54

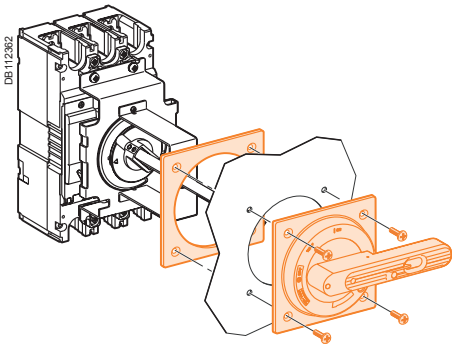

Padlocking

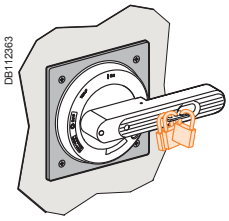

Designation	Cat. no.
Extended rotary handle	**EZ4ROTE**

Power connections, cable lugs, spreaders and extensions 400AF

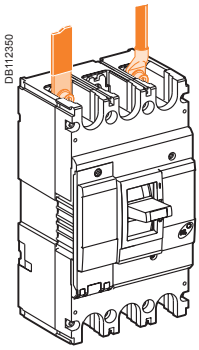

Standard circuit breaker terminals

All EasyPact circuit breakers are supplied with terminal screws

EZC400 250 to 400 A — Screw M10

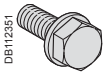

Connection of insulated bars or cables with lugs

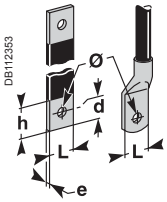

Bars	L (mm)	≤ 32
	h (mm)	d + 10
	d (mm)	≤ 10
	e (mm)	≤ 10
	Ø (mm)	10
Crimp lugs	L (mm)	≤ 32
	d (mm)	≤ 10
	Ø (mm)	10
Tightening torque		30 N.m

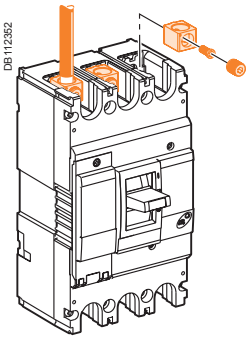

Cable lugs

Cable lugs directly screwed on standard circuit breaker terminals, for cables from 35 to 300 mm².

Designation	Cat. no.
Cable lug up to 400 A (set of 3)	**EZ4LUG4003**
Cable lug up to 400 A (set of 4)	**EZ4LUG4004**

Spreaders.

Spreaders

Increases the pitch of the circuit breaker terminals to 70 mm.

Terminal extensions

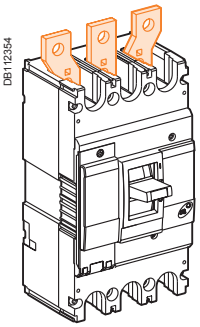

Designation	Cat. no.
Spreaders 70 mm (set of 3)	**EZ4SPDR73P**
Spreaders 70 mm (set of 4)	**EZ4SPDR74P**

Insulation of live parts and padlocking 400AF

Phase barriers

- Safety accessories for maximum insulation at the power connection points
- Usable with all other connection accessories, except terminal shields
- Each breaker is delivered with a set of phase barriers
(2 for 3 poles and 3 for 4 poles breaker)
- Additional set of phase barriers available for insulation between outgoings or between 2 side by side mounted breakers.

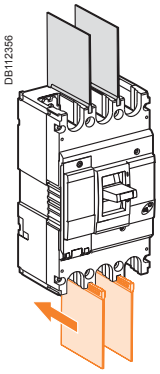

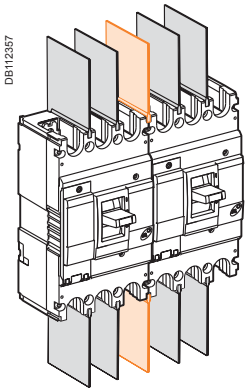

Designation	Cat. no.
Phase barriers for 3-pole breaker (set of 2)	**EZ4FASB2**
Phase barriers for 4-pole breaker (set of 3)	**EZ4FASB3**

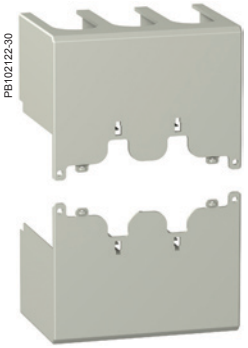

Terminal shields

- Insulating accessories for protection against direct contact with power circuits
- Designed for front connection only (long terminal shield).

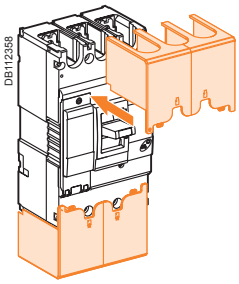

Designation	Cat. no.
Terminal shield for 3P (set of 2 parts)	**EZ4TSHD3P**
Terminal shield for 4P (set of 2 parts)	**EZ4TSHD4P**

Padlocking system

Locking in the OFF position guarantees isolation as per IEC 60947-2.
Padlocking system can receive up to 3 padlocks Ø8 mm (padlocks not supplied).

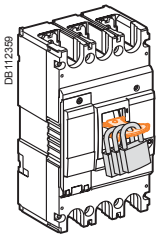

Designation	Cat. no.
Padlocking system	**EZ4LOCK**

Dimensions
EasyPact 100

Dimensions

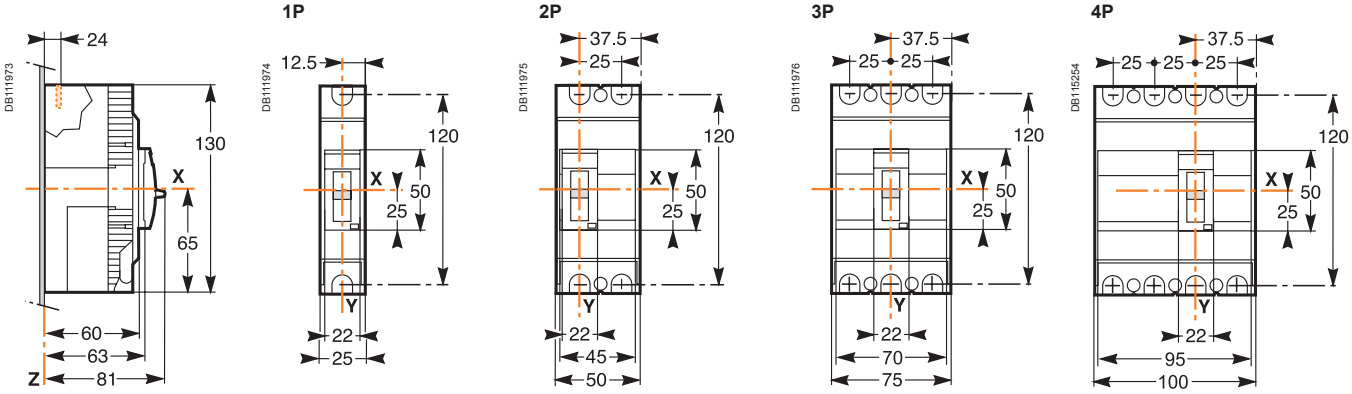

Mounting on plate

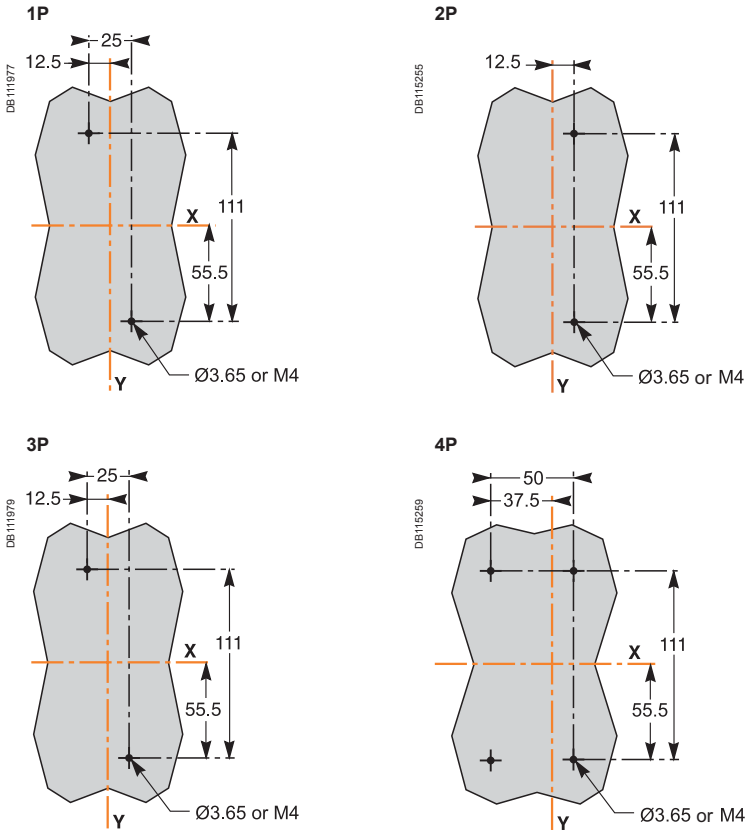

Mounting on DIN rail

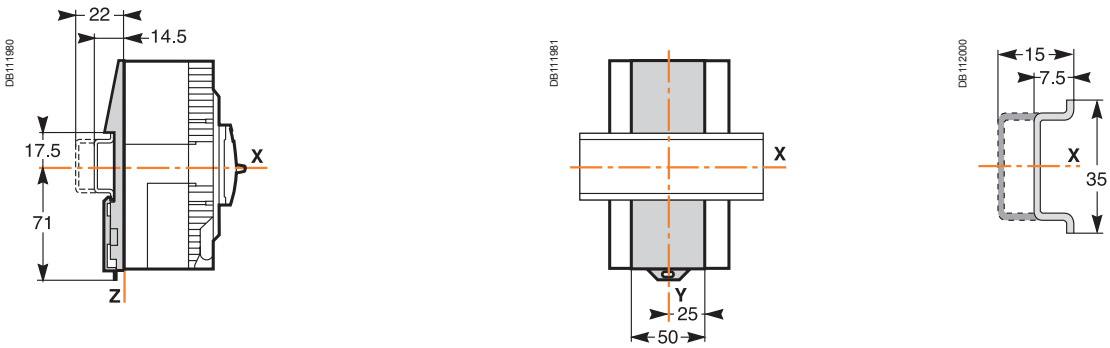

Dimensions
EasyPact 100

Door cut-out (small)

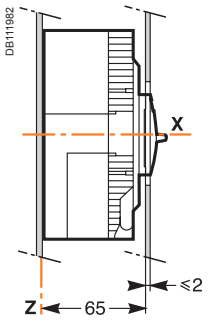

1P, 3P

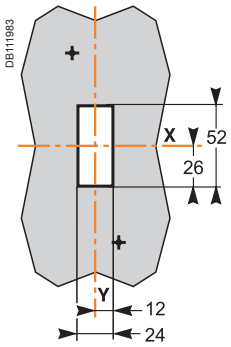

2P

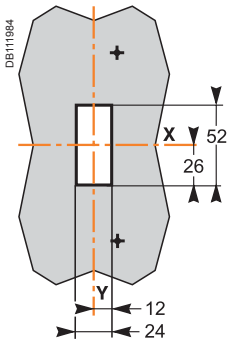

4P

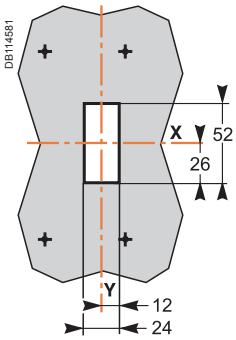

Door cut-out (large)

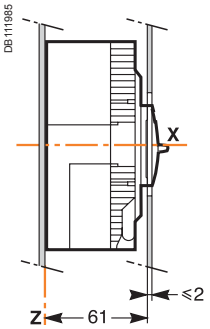

1P

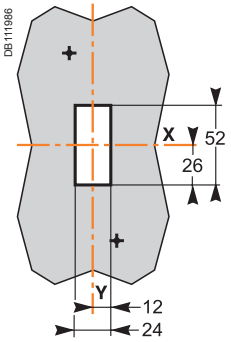

2P

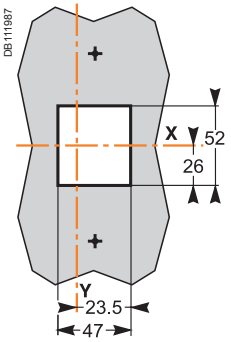

3P

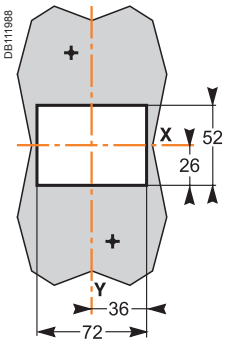

4P

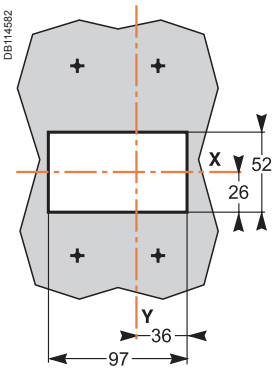

Dimensions
EasyPact 250
EZC250/EZCV250

Dimensions (EZC250)

2P, 3P

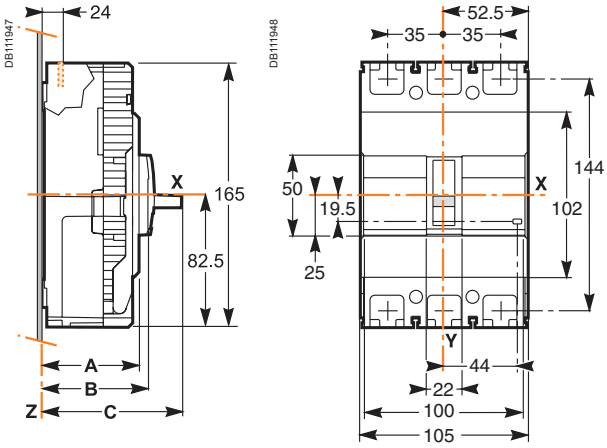

4P

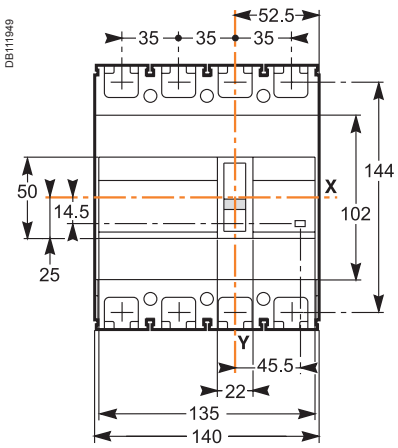

Dimensions (EZCV250)

3P

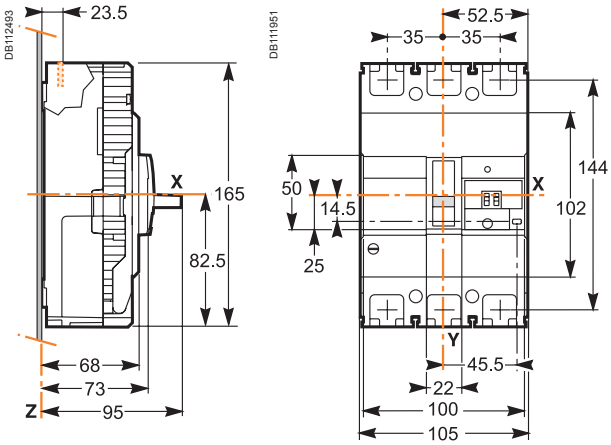

4P

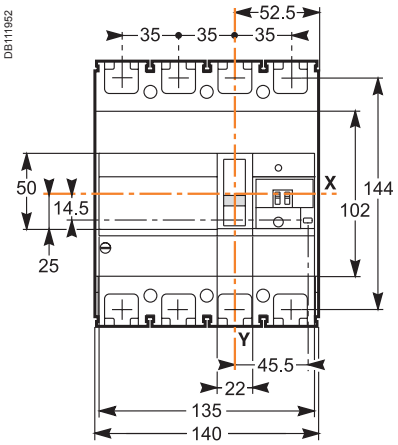

3P, 4P ELCB

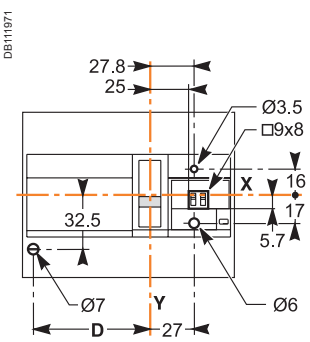

Mounting on plate

2P, 3P

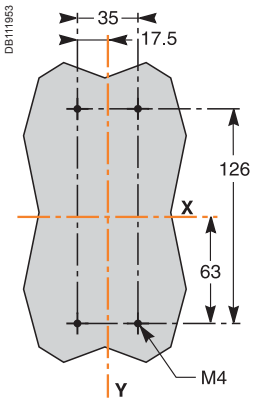

4P

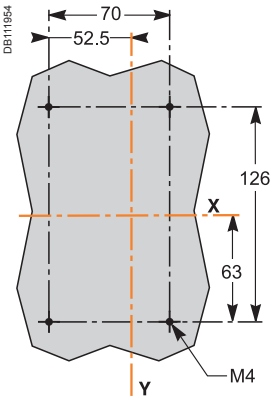

Dimensions
EasyPact 250
EZC250/EZCV250

Door cut-out (small)

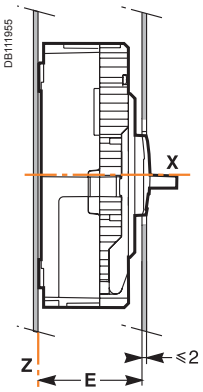

2P, 3P

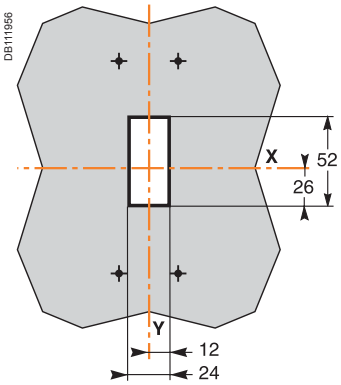

4P

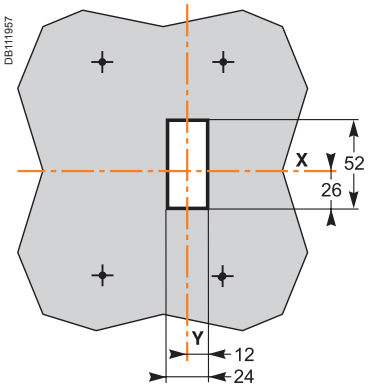

Door cut-out (large)

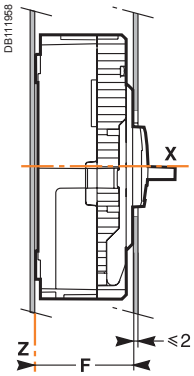

2P, 3P

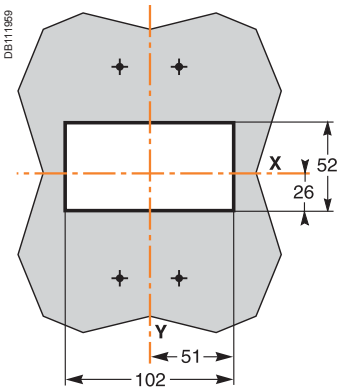

4P

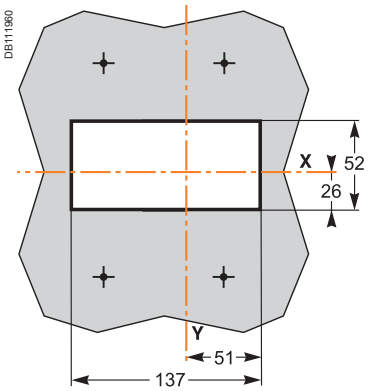

Dimensions (mm)

	A	B	C	D	E	F
EZC 2/3P	60	65	85.5	-	67	61
EZC 4P	68	73	95	-	75	69
EZCV 3P				45.5		
EZCV 4P				80.5		

Dimensions
EasyPact 400

Dimensions

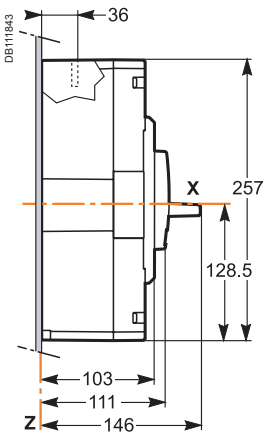

3P

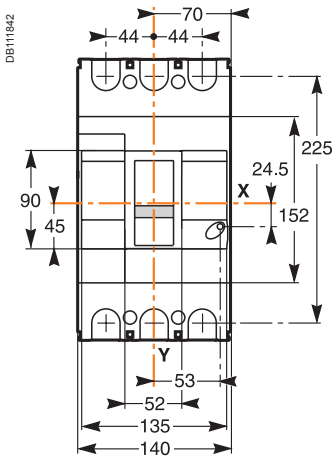

4P

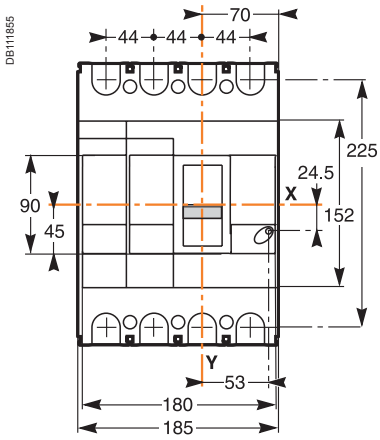

Mounting on plate

3P

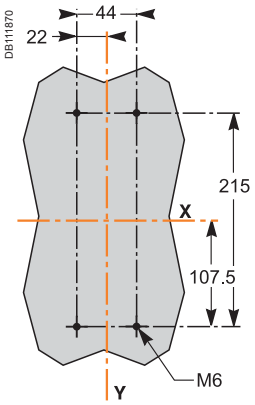

4P

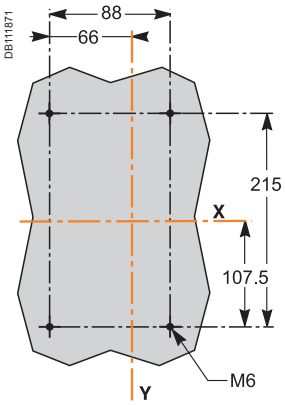

Door cut-out (small)

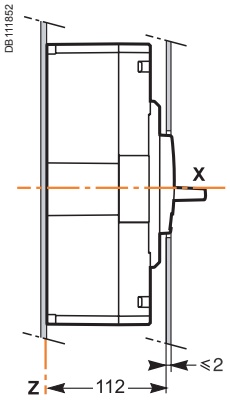

3P

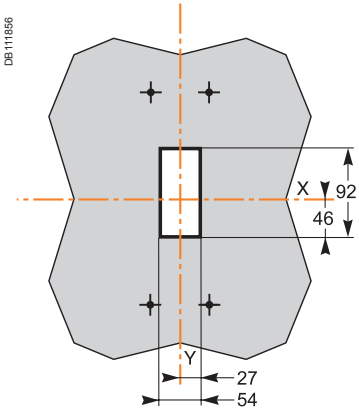

4P

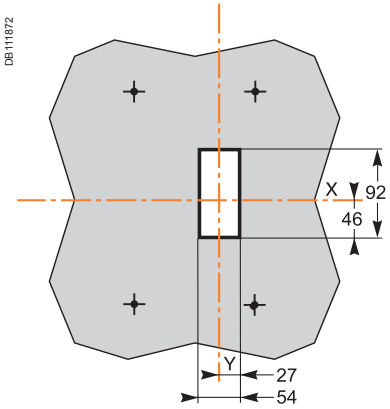

Door cut-out (large)

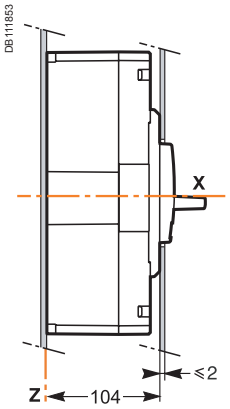

3P

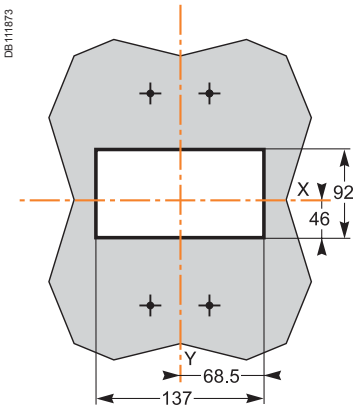

4P

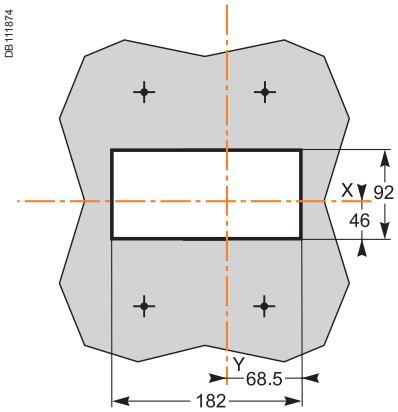

Dimensions
EasyPact 100 accessories

Terminal shields

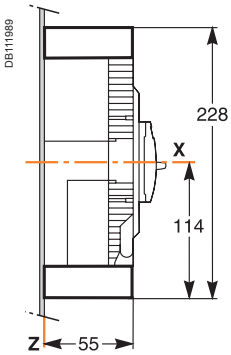

3P

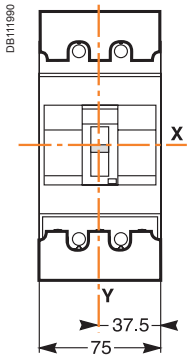

4P

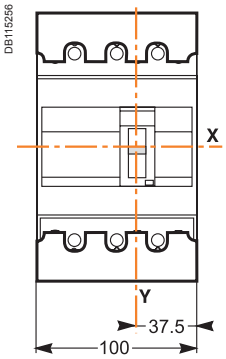

Phase barriers

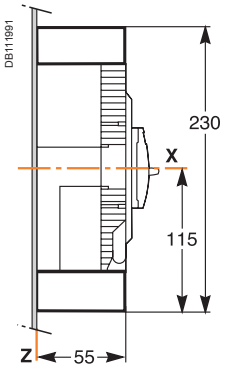

2P

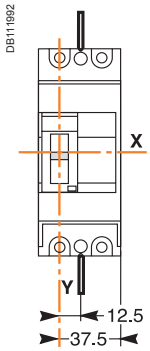

3P

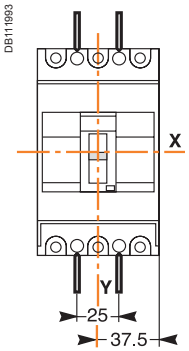

4P

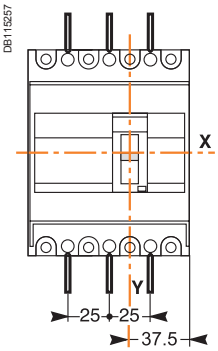

Direct rotary handle

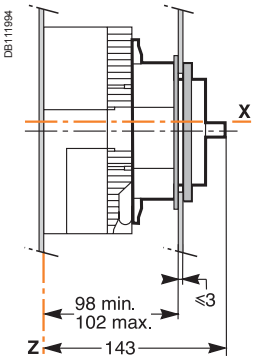

3P

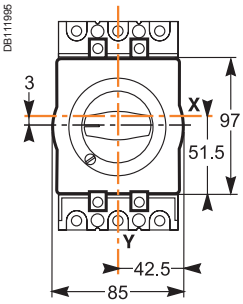

4P

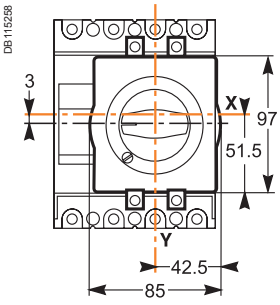

3P, 4P

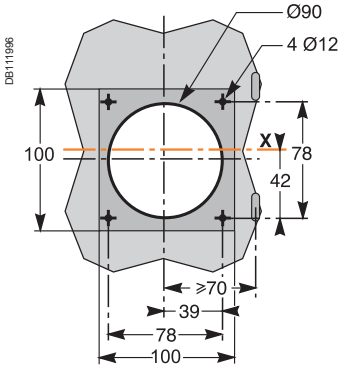

Extended rotary handle

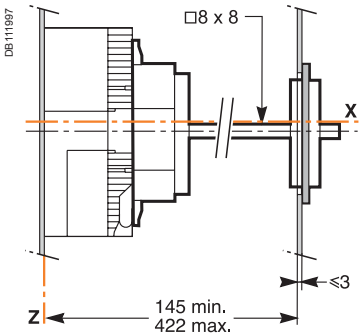

3P, 4P

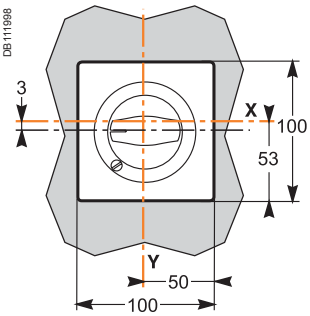

3P, 4P

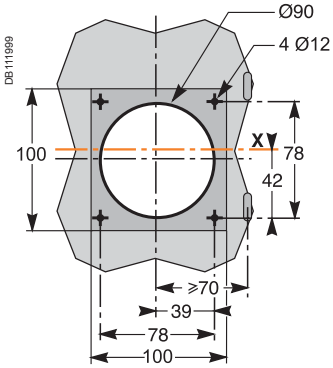

Dimensions
EasyPact 250 accessories

Terminal shields

3P, 4P

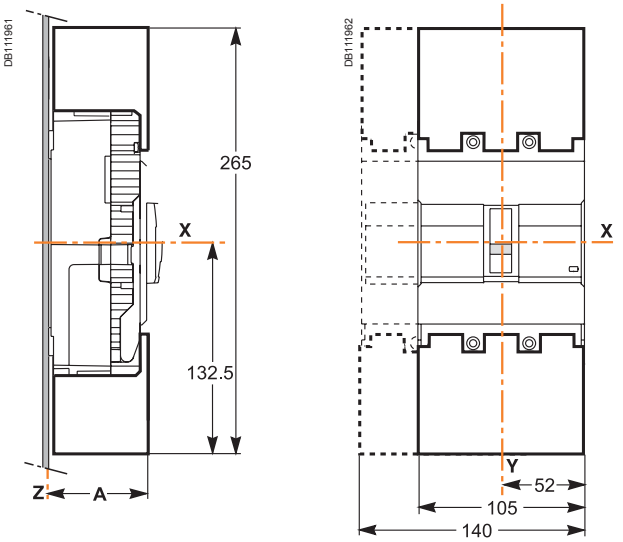

Phase barriers

3P, 4P

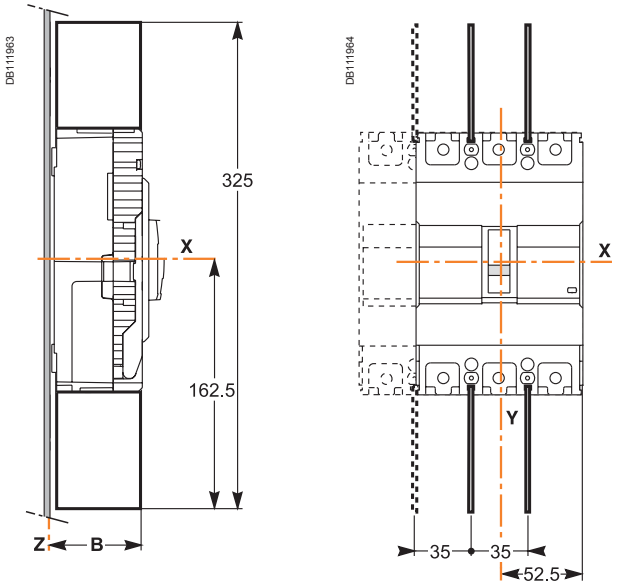

Direct rotary handle

3P 4P 3P, 4P

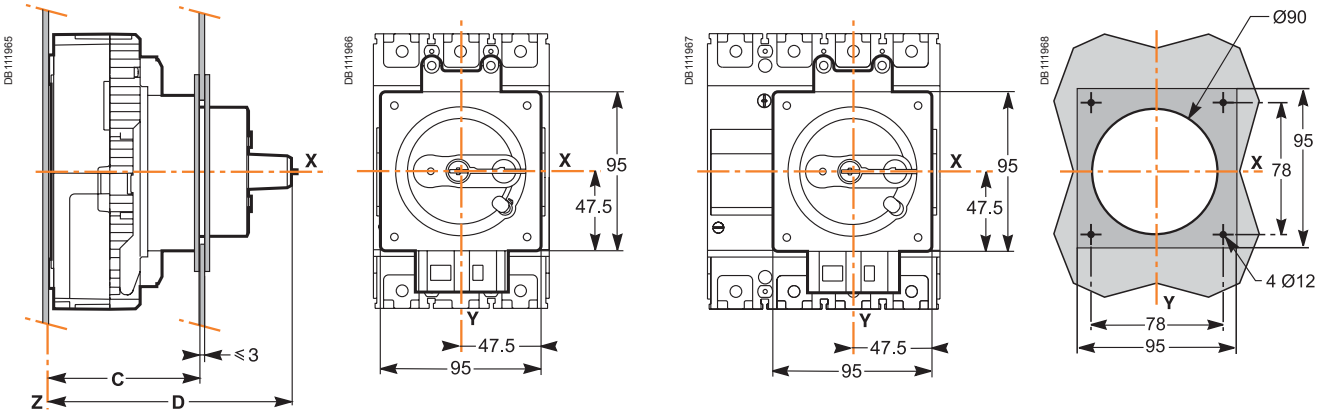

Extended rotary handle

3P, 4P 3P, 4P

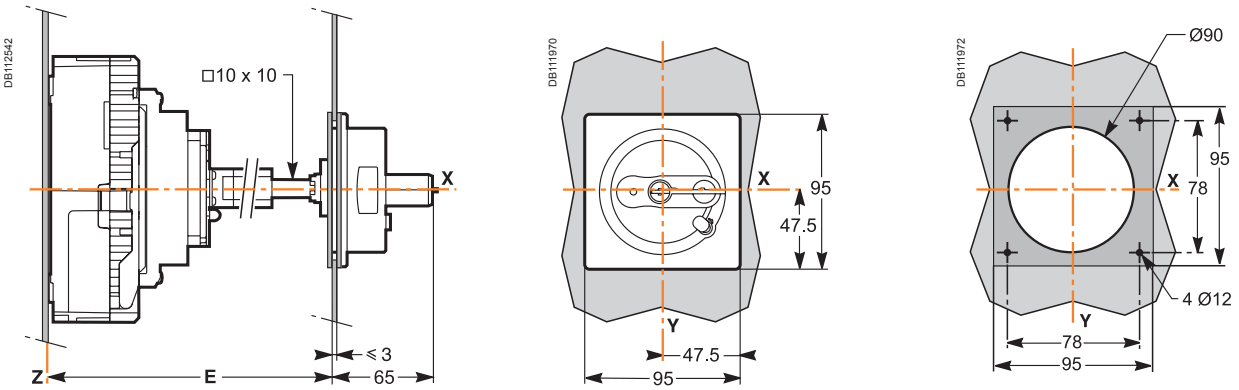

Dimensions (mm)

	A	B	C	D	E
EZC 2/3P	58.5	55	93 to 97	145	137 to 414
EZC 4P	66.5	63	101 to 105	153	145 to 422
EZCV 3P/4P					

Dimensions
EasyPact 400 accessories

Terminal shields

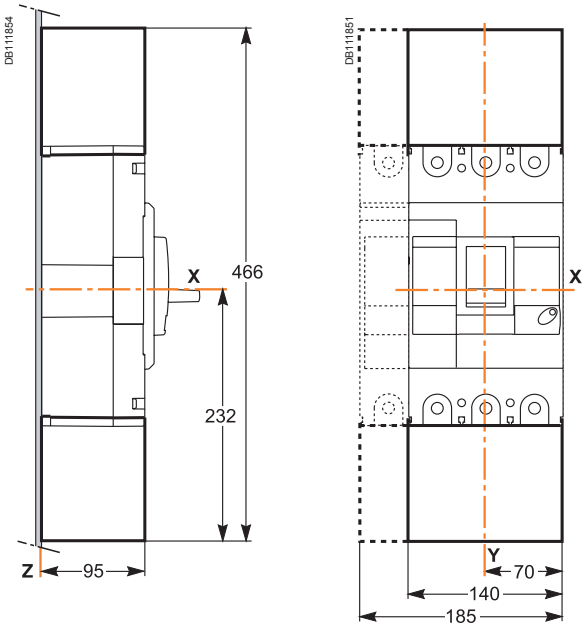

Phase barriers

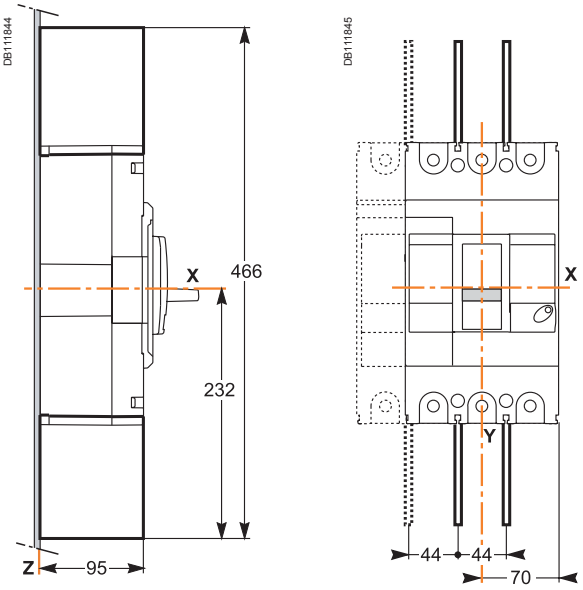

Direct rotary handle

3P 4P 3P, 4P

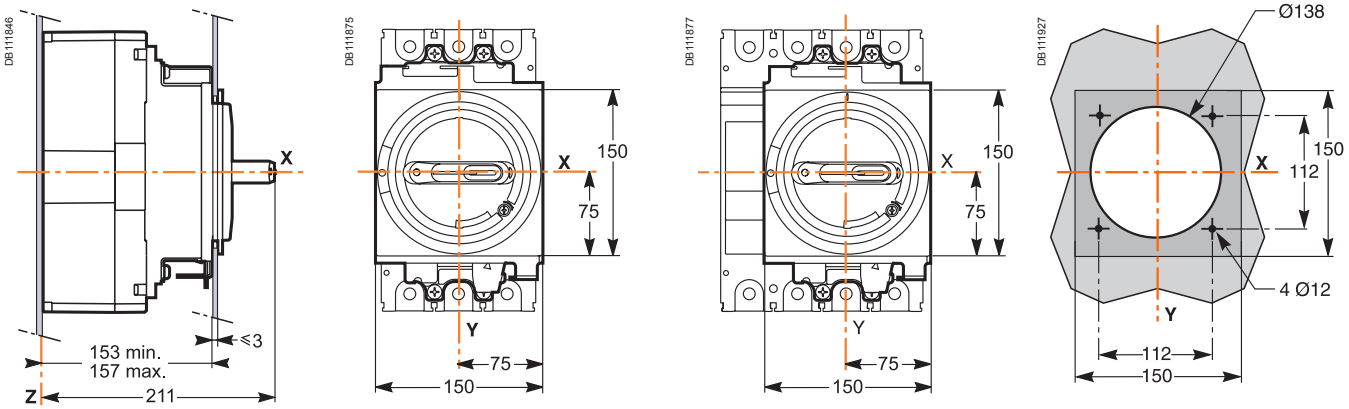

Extended rotary handle

3P, 4P 3P, 4P

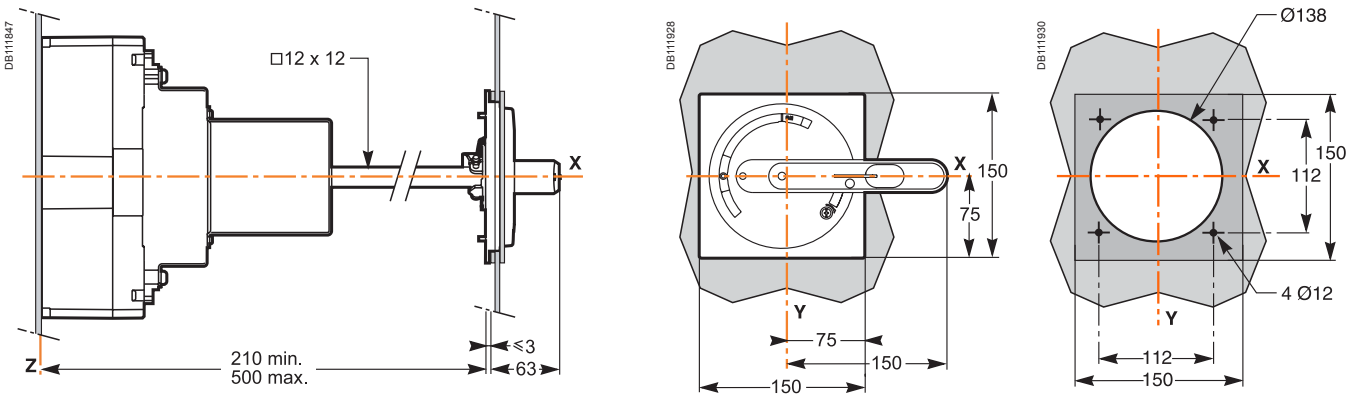

Safety clearances and minimum distances

When installing a circuit breaker, minimum distances (safety clearances) must be maintained between the device and panels, bars and other protection devices installed nearby. These distances, which depend on the ultimate breaking capacity, are defined by tests carried out in accordance with standard IEC 60947-2.
If installation conformity is not checked by type tests, it is also necessary to:
- use insulated bars for circuit-breaker connections
- block off the busbars using insulating screens.

For EasyPact breaker, terminal shields, inter-phase barriers or an insulation isolator are recommended and may be mandatory depending on the utilisation voltage and the type of installation.

Minimal distance between two adjacent circuit breakers

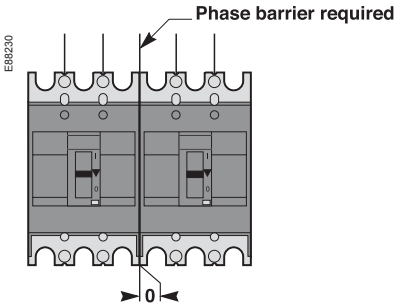

Minimal distance between the circuit breaker and top, bottom or side panels

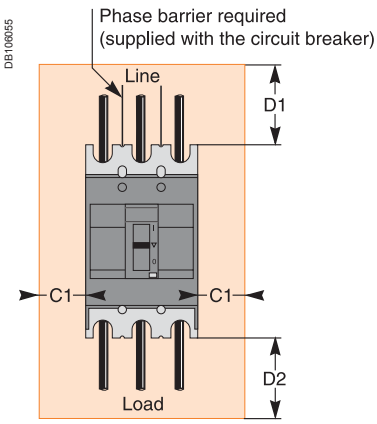

Minimal distance between the circuit breaker and front or rear panels

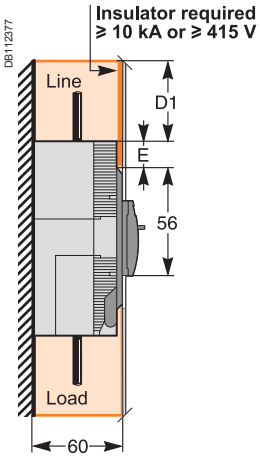

Dimensions (mm)	Bare or painted sheet metal:					
		insulated bars		bare busbar under voltage		
EasyPact circuit breaker	**C1**	**D1**	**D2**	**D1**	**D2**	**E**
EZC100B/F/N	40	45	45	75	45	40
EZC100H	40	60	45	75	45	40
EZC250F/N-EZCV250N	50	60	45	140	45	42.5
EZC250H-EZCV250H	50	80	45	140	45	42.5
EZC400N	50	120	100	250	100	40
EZC400H	80	140	100	250	100	40

The mandatory distances when installing EasyPact circuit breakers are calculated from the device case, not taking into account the terminal shields or the phase barriers.

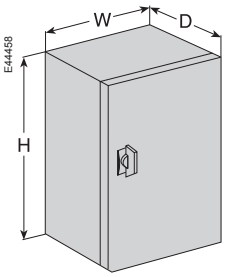

Installation in an enclosure.

Installation in an enclosure

EasyPact circuit breakers can be installed in a metal enclosure together with other devices (contactors, motor-protection circuit breakers, LEDs, etc.).

Minimum enclosure dimensions (3P)

Circuit breakers	Height (mm)	Depth (mm) (*)	Width (mm)
EZC100B/F/N	200	90	155
EZC100H	215	90	155
EZC250F/N-EZCV250N	270	90	205
EZC250H-EZCV250H	290	90	205
EZC400N	480	160	240
EZC400H	500	160	300

(*) with front door.

Temperature derating

Ambient temperature

EasyPact devices are equipped with fixed thermal-magnetic trip units.

■ EasyPact has been particularly designed to hold 100 % In at 50 °C without tripping in normal condition (except for earth-leakage circuit breakers).

■ EasyPact circuit breakers may be used between -25 °C and +70 °C.

■ EasyPact circuit breakers should be put into service under normal ambient operating temperature conditions. Exceptionally, the circuit breaker may be put into service when the ambient temperature is between -35 °C and -25 °C.

■ the permissible storage-temperature range for EasyPact circuit breakers in the original packing is -35 °C to +85 °C.

To determine tripping times using time/current curves, use Ir values corresponding to the thermal setting on the device, corrected as indicated in the tables below.

Rated current (A)	25°C	40°C	45°C	50°C	55°C	60°C	65°C	70°C
EZC100								
15	17.0	15.7	15.3	15.0	14.7	14.6	14.2	13.8
16	18.1	16.7	16.3	16.0	15.7	15.6	15.1	14.7
20	21.8	20.4	20.2	20.0	19.7	19.2	18.9	18.5
25	26.9	25.7	25.3	25.0	24.7	24.5	24.3	24.0
30	34.5	31.4	30.7	30.0	29.4	29.1	28.5	28.0
32	36.8	33.5	32.7	32.0	31.4	31.0	30.4	29.9
40	42.8	40.9	40.4	40.0	39.5	38.0	37.6	37.1
45	48.8	46.9	45.9	45.0	44.4	43.3	42.6	41.9
50	54.2	52.1	51.0	50.0	49.3	48.1	47.3	46.6
60	64.4	61.8	60.9	60.0	59.0	57.5	56.6	55.7
63	67.6	64.9	63.9	63.0	62.0	60.4	59.4	58.5
75	78.6	76.8	75.9	75.0	73.5	70.4	69.8	69.1
80	84.4	82.2	81.1	80.0	78.6	77.3	76.7	76.1
100	109	103	101	100	99	94	94	93
EZC250								
63	77	69	66	63	60	56	53	49
80	93	86	83	80	77	74	71	68
100	115	106	103	100	96	93	89	85
125	148	135	130	125	120	114	109	103
150	174	160	155	150	145	139	134	128
160	186	171	166	160	154	148	142	136
175	207	188	182	175	168	161	153	145
200	236	215	208	200	192	184	175	166
225	268	244	235	225	215	205	194	182
250	297	270	260	250	239	228	215	203
EZCV250								
63	72	63	60	56	53	49	44	39
80	89	80	77	73	70	66	62	58
100	113	100	95	91	86	80	74	68
125	140	125	120	114	108	102	95	88
150	163	150	145	141	136	131	125	120
160	177	160	154	148	141	135	127	120
175	194	175	168	161	154	146	138	126
200	223	200	192	183	175	165	155	144
225	245	225	218	211	203	196	180	162
250	277	250	240	230	220	209	198	180
EZC400								
250	293	268	260	250	240	228	218	208
300	351	321	312	300	288	273	261	249
320	374	342	333	320	307	291	278	266
350	410	375	364	350	336	319	305	291
400	468	428	416	400	384	364	348	332

Tripping curves

EasyPact 100 TM trip units

15-16 A

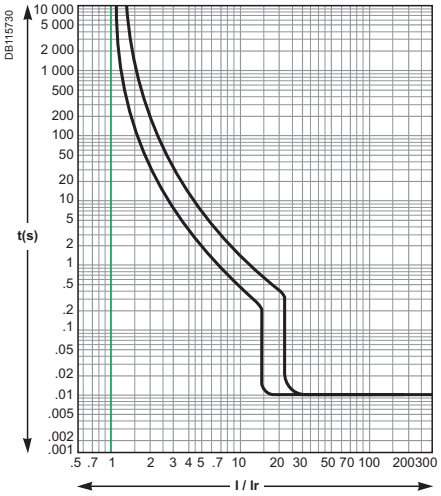

20 A

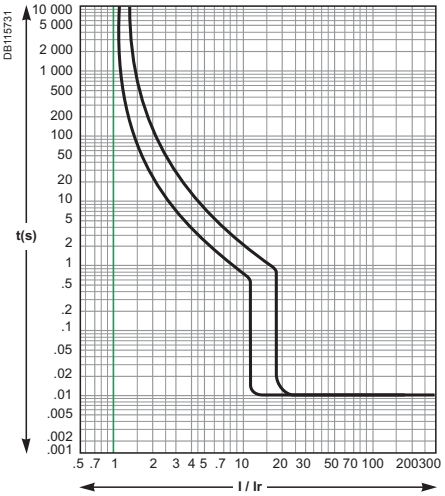

25 A

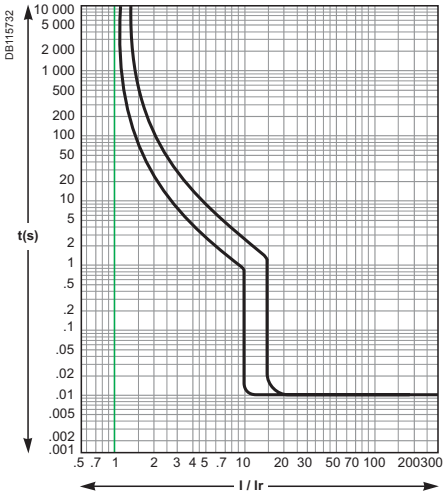

30-32 A

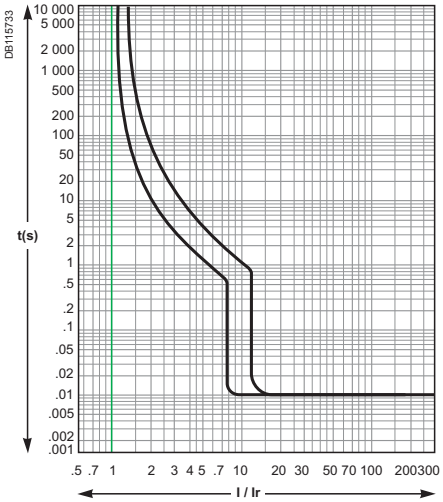

40 A

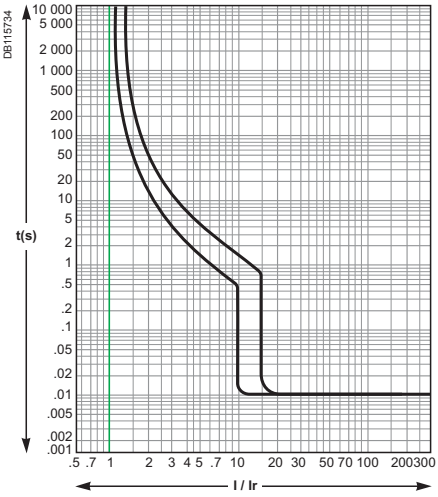

45-50 A

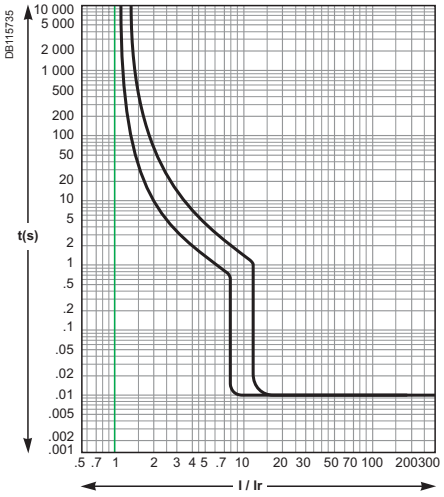

60-63 A

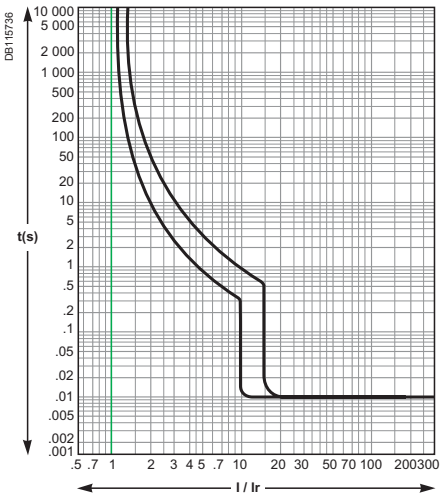

75 A

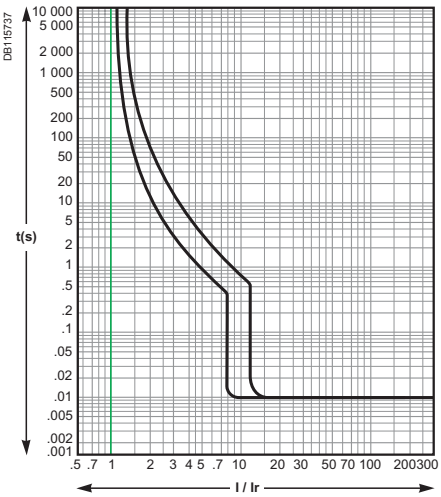

80 A

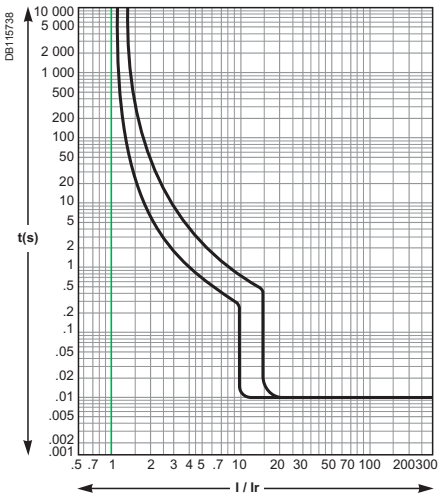

Tripping curves (cont.)

EasyPact 100 TM trip units (cont.)

100 A

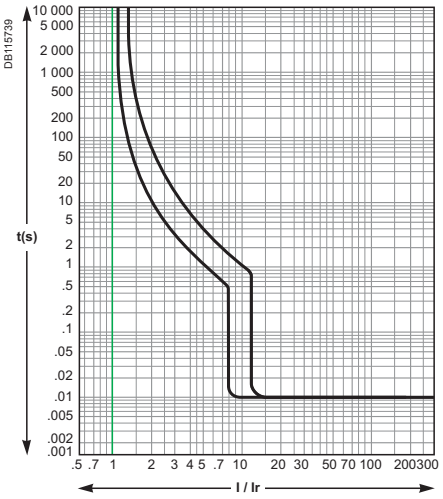

EasyPact 250 TM trip units

100-125 A

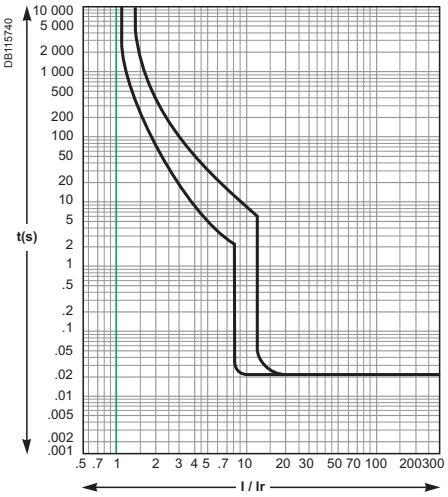

150-160-175-200 A

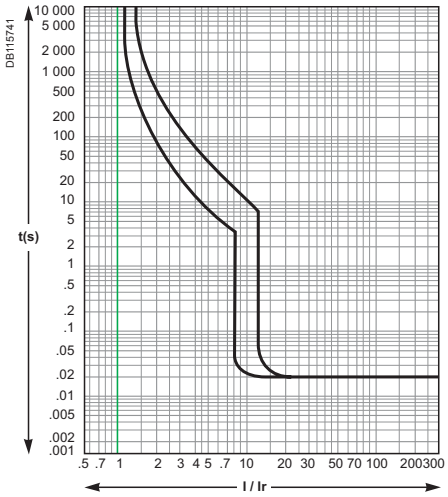

225-250 A

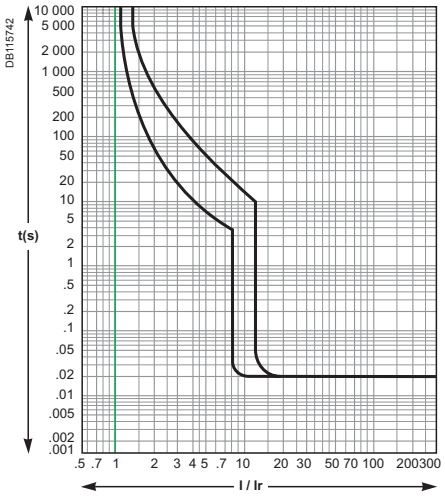

EasyPact 400 TM trip units

250-300-320-350-400 A

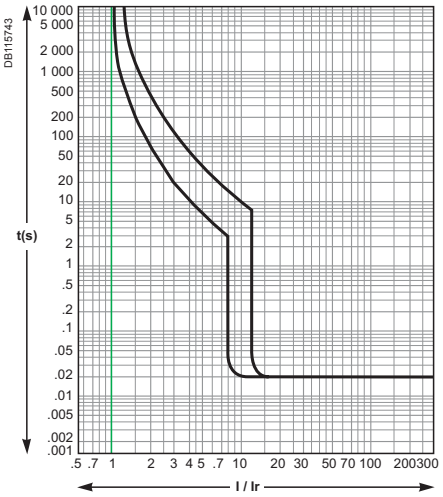

Current-limiting curves

The limiting capacity of a circuit breaker is its aptitude to limit short-circuit currents.

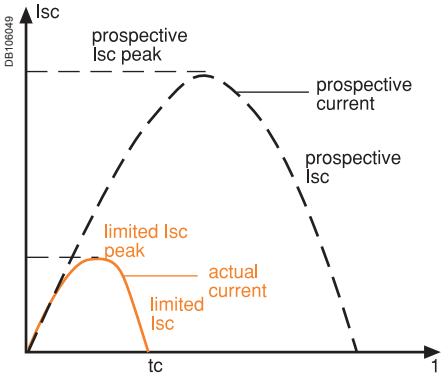

The exceptional limiting capacity of the EasyPact range greatly reduces the forces created by fault currents in devices.
The result is a major increase in breaking performance.

The Ics value, defined by IEC standard 60947-2, is guaranteed by tests comprising the following operations:
- ■ break three times consecutively a fault current equal from 25% to 100% of Icu
- ■ check that the device continues to function normally:
- □ it conducts the rated current without abnormal temperature rises
- □ protection functions perform within the limits specified by the standard
- □ suitability for isolation is not impaired.

Longer service life of electrical installations

Current-limiting circuit breakers greatly reduce the negative effects of short-circuits on installations.

Thermal effects

Less temperature rise in conductors, therefore longer service life for cables.

Mechanical effects

Reduced electrodynamic forces, therefore less risk of electrical contacts or busbars being deformed or broken.

Electromagnetic effects

Less disturbances for measuring devices located near electrical circuits.

Economy by means of cascading

Cascading is a technique directly derived from current limiting. Circuit breakers with breaking capacities less than the prospective short-circuit current may be installed downstream of a limiting circuit breaker. The breaking capacity is reinforced by the limiting capacity of the upstream device.
It follows that substantial savings can be made on downstream equipment and enclosures.

Current-limiting curves

The current-limiting capacity of a circuit breaker is expressed by two curves which are a function of the prospective short-circuit current (the current which would flow if no protection devices were installed):
- ■ the actual peak current (limited current),
- ■ thermal stress (A^2s), i.e. the energy dissipated by the short-circuit in a conductor with a resistance of 1 Ω.

Current limiting curves 380/415 V AC

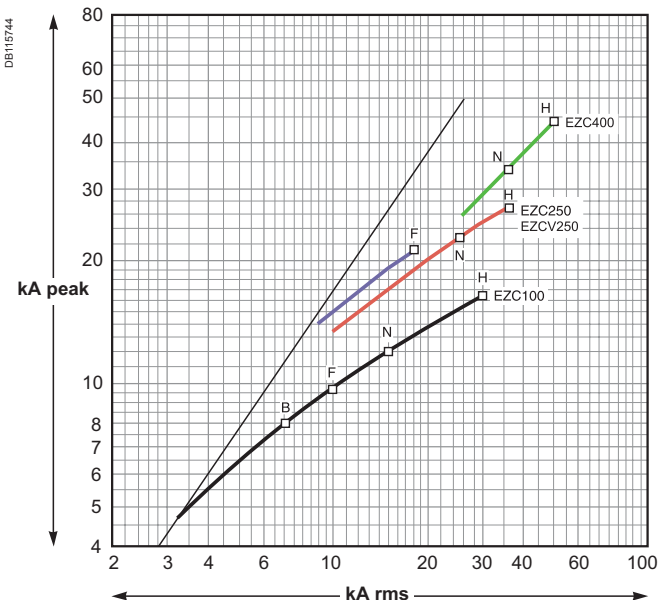

Thermal-stress curves 380/415 V AC

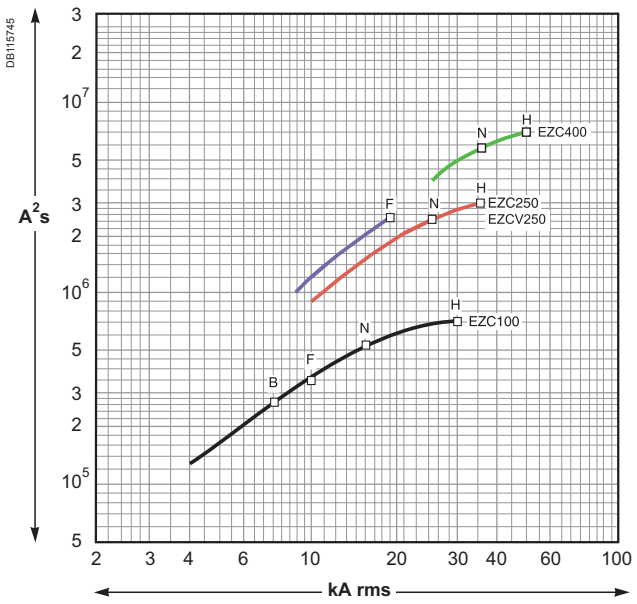

Cascading

What is cascading?

Cascading is the use of the current limiting capacity of circuit breakers at a given point to permit installation of lower-rated and therefore lower-cost circuit breakers downstream.
The upstream compact circuit breakers acts as a barrier against short-circuit currents. In this way, downstream circuit breakers with lower breaking capacities than the prospective short-circuit (at their point of installation) operate under their normal breaking conditions.
Since the current is limited throughout the circuit controlled by the limiting circuit breaker, cascading applies to all switchgear downstream. It is not restricted to two consecutive devices.

General use of cascading

With cascading, the devices can be installed in different switchboards. Thus, in general, cascading refers to any combination of circuit breakers where a circuit breaker with a breaking capacity less than the prospective Isc at its point of installation can be used. Of course, the breaking capacity of the upstream circuit breaker must be greater than or equal to the prospective short-circuit current at its point of installation.
The combination of two circuit breakers in cascading configuration is covered by the IEC 60947-2.

Coordination between circuit breakers

The use of a protective device possessing a breaking capacity less than the prospective short-circuit current at its installation point is permitted as long as another device is installed upstream with at least the necessary breaking capacity.
In this case, the characteristics of the two devices must be coordinated in such a way that the energy let through by the upstream device is not more than that which can be withstood by the downstream device and the cables protected by these devices without damage.
Cascading can only be checked by laboratory tests and the possible combinations can be specified only by the circuit breaker manufacturer.

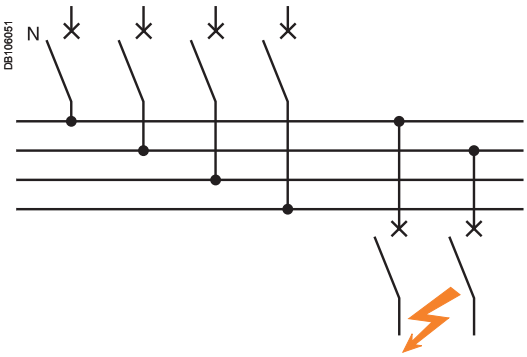

220/240 V network downstream from a 380/415 V network

For 1P + N or 2P circuit breakers connected between the phase and neutral on a 380/415 V network, with a TT or TNS neutral system, consult the 220/240 V cascading table to determine cascading possibilities between upstream and downstream circuit breakers.

Economy by means of cascading

Thanks to cascading, circuit breakers with breaking capacities less than the prospective short-circuit current may be installed downstream from a current limiting circuit breaker.
It follows that substantial savings can be made on downstream switchgear and enclosures.

Cascading tables

Merlin Gerin cascading tables are:
- drawn up on the basis of calculations (comparison between the energy limited by the upstream device and the maximum permissible thermal stress for the downstream device)
- verified experimentally in accordance with IEC standard 60947-2.

For distribution systems with 220/240 V, 380/415 V and 440 V between phases, the tables of the following pages indicate cascading possibilities between upstream Compact/EasyPact and downstream Multi 9 and EasyPact circuit breakers.

Cascading tables

DB106106

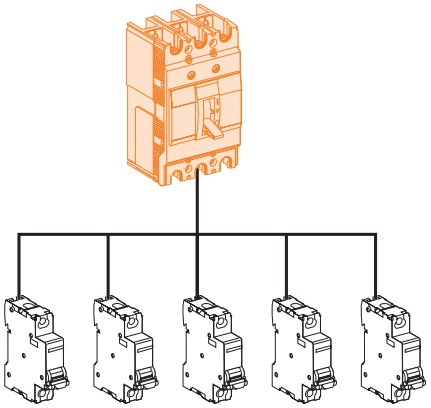

Network 220/240 V

Upstream		EZC100F	EZC100N	EZC100H
Breaking capacity kA rms		**25**	**25**	**100**
Downstream		**Enhanced breaking capacity**		
NC45	6	10	10	15
NC45N	10	15	15	25
NC45H	15	25	25	50
C60a	10	25	25	50
C60N	20	25	25	65
C60H	30	-	-	65
QO-E	10	25	25	50

Upstream		EZC250F	EZC250N EZCV250N	EZC250H EZCV250H	NS250H
Breaking capacity kA rms		**25**	**50**	**85**	**100**
Downstream		**Enhanced breaking capacity**			
EZC100B	10	-	-	15	20
EZC100F	25	-	30	30	50
EZC100N	25	-	30	36	50
EZC100H	100	-	-	-	-

Upstream		EZ400N	EZ400H	NB400 NB630	NS400N NS630N	NS400H NS630H
Breaking capacity kA rms		**85**	**100**	**85**	**85**	**100**
Downstream		**Enhanced breaking capacity**				
EZC100B	10	20	20	20	20	20
EZC100F	25	50	50	50	50	50
EZC100N	25	50	50	50	50	50
EZC100H	100	-	-	-	-	-
EZC250F	25	50	50	50	50	50
EZC/EZCV250N	50	85	85	85	85	85
EZC/EZCV250H	85	-	100	-	-	100

DB106160

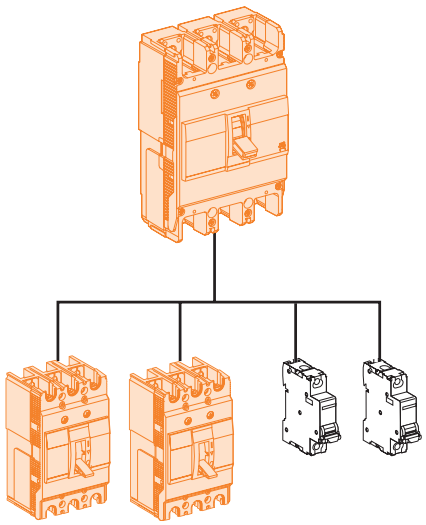

Network 380/415 V

Upstream		EZC100F	EZC100N	EZC100H
Breaking capacity kA rms		**10**	**15**	**30**
Downstream		**Enhanced breaking capacity**		
NC45	5	6	8	15
NC45N	8	10	10	15
NC45H	10	-	15	15
C60a	6	10	15	15
C60N	10	-	15	15
C60H	15	-	-	15
QO-E	5	10	15	15
GV2M	15	-	-	-

Upstream		EZC250F	EZC250N EZCV250N	EZC250H EZCV250H	NS250H
Breaking capacity kA rms		**18**	**25**	**36**	**70**
Downstream		**Enhanced breaking capacity**			
EZC100B	7.5	-	-	-	15
EZC100F	10	-	15	15	30
EZC100N	15	-	20	25	50
EZC100H	30	-	-	36	70

Upstream		EZ400N	EZ400H	NB400 NB630	NS400N NS630N	NS400H NS630H
Breaking capacity kA rms		**36**	**50**	**30**	**50**	**70**
Downstream		**Enhanced breaking capacity**				
EZC100B	7.5	-	-	-	-	-
EZC100F	10	-	-	-	-	-
EZC100N	15	20	20	20	20	30
EZC100H	30	36	36	-	45	50
EZC250F	18	20	20	20	20	20
EZC/EZCV250N	25	36	36	30	36	40
EZC/EZCV250H	36	-	-	-	45	50

Cascading tables

Network 440 V

Upstream		EZC250F	EZC250N EZCV250N	EZC250H EZCV250H
Breaking capacity kA rms		**15**	**20**	**25**
Downstream		**Enhanced breaking capacity**		
EZC100B	5	-	-	-
EZC100F	7.5	-	-	-
EZC100N	10	-	15	15
EZC100H	20	-	-	-

Upstream		EZ400N	EZ400H	NB400 NB630	NS400N NS630N	NS400H NS630H
Breaking capacity kA rms		**20**	**40**	**30**	**42**	**65**
Downstream		**Enhanced breaking capacity**				
EZC100B	5	-	-	-	-	-
EZC100F	7.5	-	-	-	-	-
EZC100N	10	15	15	15	15	25
EZC100H	25	-	30	30	30	30
EZC250F	15	20	20	-	-	-
EZC/EZCV250N	20	-	25	25	25	30
EZC/EZCV250H	25	-	30	30	30	30

Motor protection

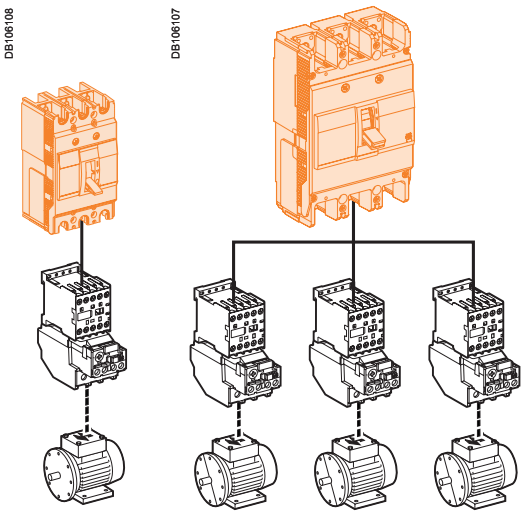

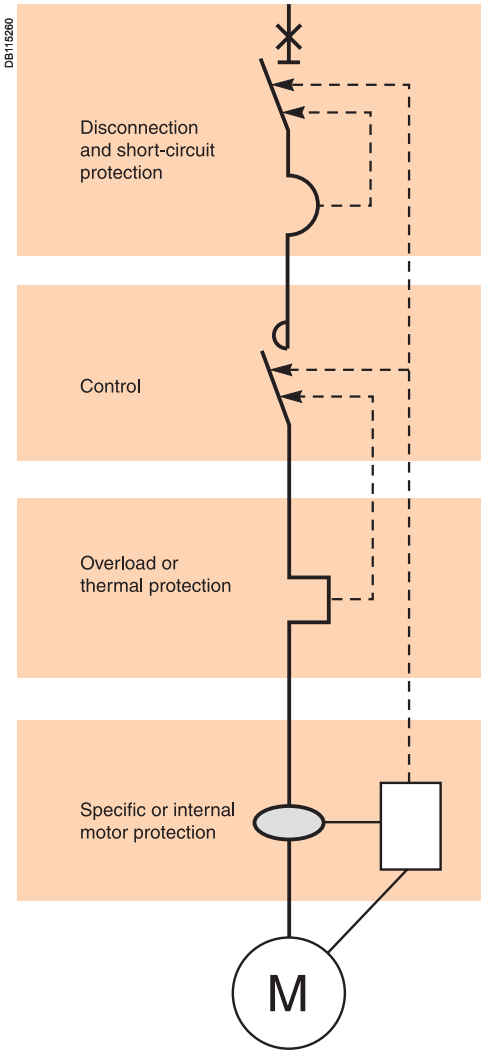

A circuit supplying a motor may include one, two, three or four switchgear or controlgear devices fulfilling one or more functions.

When a number of devices are used, they must be coordinated to ensure optimum operation of the motor.
Protection of a motor circuit involves a number of parameters that depend on:
- the application (type of machine driven, operating safety, starting frequency, etc.)
- the level of service continuity imposed by the load or the application
- the applicable standards to ensure protection of life and property.

The necessary electrical functions are of very different natures:
- short circuit protection
- overload protection dedicated for motor
- control (generally with high endurance levels)
- isolation.

Protection functions

Disconnection functions:
Isolate a motor circuit prior to maintenance operations.

Short-circuit protection:
Protect the starter and the cables against major overcurrents (> 10 In).
This type of protection is provided by a circuit breaker.

Control:
Start and stop the motor and, if applicable:
- gradual acceleration
- speed control.

Overload protection:
Protect the starter and the cables against minor overcurrents (< 10 In).
Thermal relays provide protection against this type of fault. They may be:
- integrated in the short-circuit protective device
- separate.

Additional specific protection:
- limitative fault protection (while the motor is running)
- preventive fault protection (monitoring of motor insulation with motor off).

Overloads (I < 10 In)
An overload may be caused by:
- an electrical problem, for instance on the mains (loss of a phase, voltage outside tolerances, etc.)
- a mechanical problem, for instance excessive torque due to abnormally high demands by the process or motor damage (bearing vibrations, etc.).

A further consequence of these two origins is excessively long starting.

Impedance short-circuit (10 < I < 50 In)
Deterioration of motor-winding insulation is the primary cause.

Short-circuit (I > 50 In)
This type of fault is relatively rare. A possible cause may be a connection error during maintenance.

Protection against insulation faults
This type of protection may be provided by:
- a residual current device (RCD)
- an insulation monitoring device (IMD).

Motor protection

Motor protection - circuit breaker selection

Motors	220/230 V	240 V	Circuit breakers		380/400 V	415 V	Circuit breakers		440 V	Circuit breakers	
P (kW)	I (A)	I (A)	Type	Rating In (A)	I (A)	I (A)	Type	Rating In (A)	I (A)	Type	Rating In (A)
0.37	2	1.8	EZC100	20	1.2	1.1	EZC100	20	1	EZC100	20
0.55	2.8	2.6		20	1.6	1.5		20	1.4		20
0.75	3.5	3.2		20	2	1.8		20	1.7		20
1.1	5	4.5		20	2.8	2.6		20	2.4		20
1.5	6.5	6		20	3.7	3.4		20	3.1		20
2.2	9	8		20	5.3	4.8		20	4.5		20
3	12	11		20	7	6.5		20	5.8		20
4	15	14		20	9	8.2		20	8		20
5.5	21	19		40	12	11		20	10.5		20
7.5	28	25		60	16	14		20	13.7		20
10	36	33		60	21	19		40	19		40
11	39	36		80	23	21		40	20		40
15	52	48		80	30	28		60	26.5		60
18.5	63	59		80	37	34		60	33		60
22	75	70	EZC250	125	43	40		80	39		60
30	100	95		160	59	55	EZC250	125	52		80
37	125	115		250	72	66		150	63	EZC250	125
45	150	140		250	85	80		160	76		150
55	180	170	EZC400	300	105	100		200	90		160
75	250	235		-	140	135		250	125		250
90	300	270		-	170	160	EZC400	300	140		250
110	360	330		-	210	200		350	178	EZC400	300

Capacitor protection

EZC100.

EZC250.

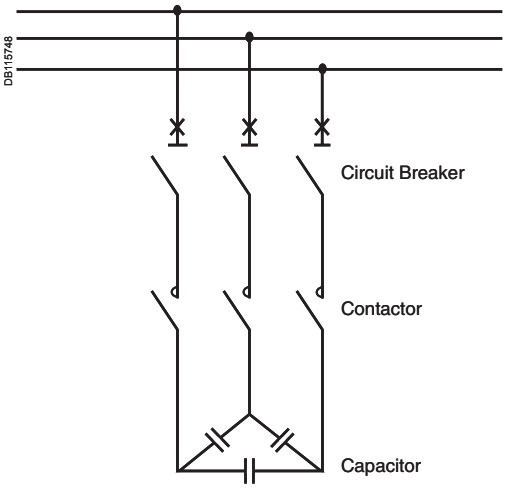

EasyPact circuit breaker is suitable for capacitor protection following the rules below:

■ **Inc = Nominal current of the capacitor**

$$Inc = \frac{Qc}{U\sqrt{3}}$$

Inc = Nominal Current Capacitor (A)
Qc = Reactive power (kVAR)
U = Nominal Voltage (V)

■ **Inb = Nominal current of the circuit breaker (EZC)**
□ Inb = 1.36 x Inc for standard equipment
□ Inb = 1.5 x Inc for overrated type equipment
□ Inb = 1.12 x Inc for detuned type equipment: 2.7 tuning
□ Inb = 1.19 x Inc for detuned type equipment: 3.8 tuning
□ Inb = 1.31 x Inc for detuned type equipment: 4.3 tuning
□ the short-circuit (magnetic) protection-setting thresholds must enable passage of the energising transients: 10 x Inc for standard, overrated and detuned type equipment.

■ **Icu = Ultimate breaking capacity of the circuit breaker (EZC)**
Icu short-circuit level is given by the installation.

Example:

Table at 400 V AC - 3 phases 50 Hz for standard equipment.

Reactive power (kVAR)	Inc (A)	Inb (A)	Breaking capacity to Circuit Breaker 15 kA	30 kA
7.5	11	15	**EZC100N3015**	**EZC100H3015**
10	14	20	**EZC100N3020**	**EZC100H3020**
15	22	30	**EZC100N3030**	**EZC100H3030**
20	29	40	**EZC100N3040**	**EZC100H3040**
30	43	60	**EZC100N3060**	**EZC100H3060**
40	58	80	**EZC100N3080**	**EZC100H3080**
50	72	100	**EZC100N3100**	**EZC100H3100**
60	87	118	**EZC250F3125**	**EZC250H3125**
75	108	147	**EZC250F3150**	**EZC250H3150**
100	144	196	**EZC250F3200**	**EZC250H3200**

Busbars

Introduction

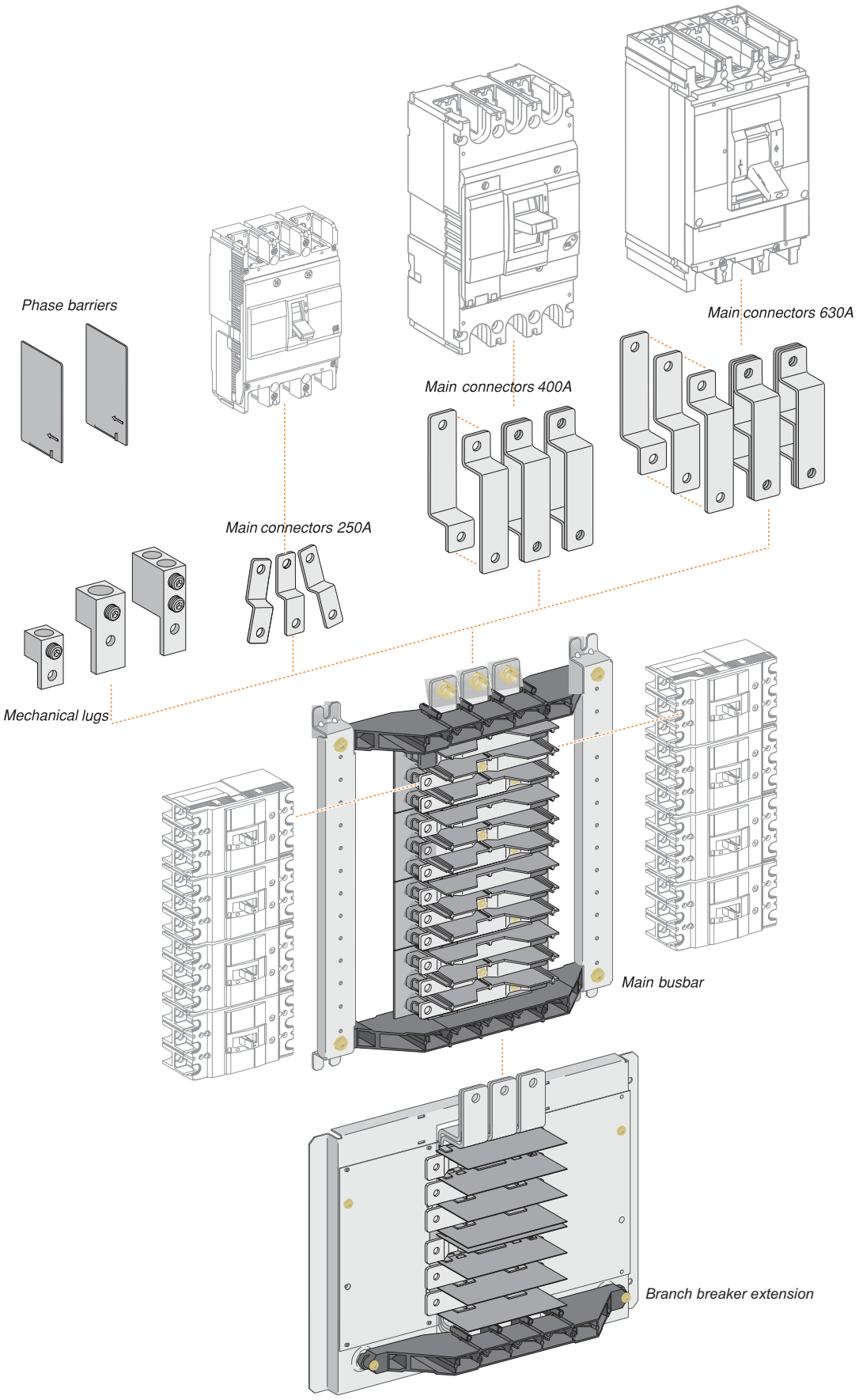

Introduction

The EasyPact Busbar - engineered and certified together with the EasyPact MCCB to provide superior performance, flexibility and value. Simply the best solution for your distribution panel needs:

- *available for 250 A, 400 A or 630 A main incoming current*
- *available for 4, 6, 8, 10 or 12 Ways (3 poles) EasyPact 100 A (max.) outgoing MCCB's*
- *400 A and 630 A systems can accept an additional 2 or 4 EasyPact 250 or Compact NS250 outgoing MCCB's*
- *designed and tested to meet IEC 60439-1 requirements*
- *completely assembled in ISO certified facility for easy installation into locally made enclosures.*

EZ116P-70

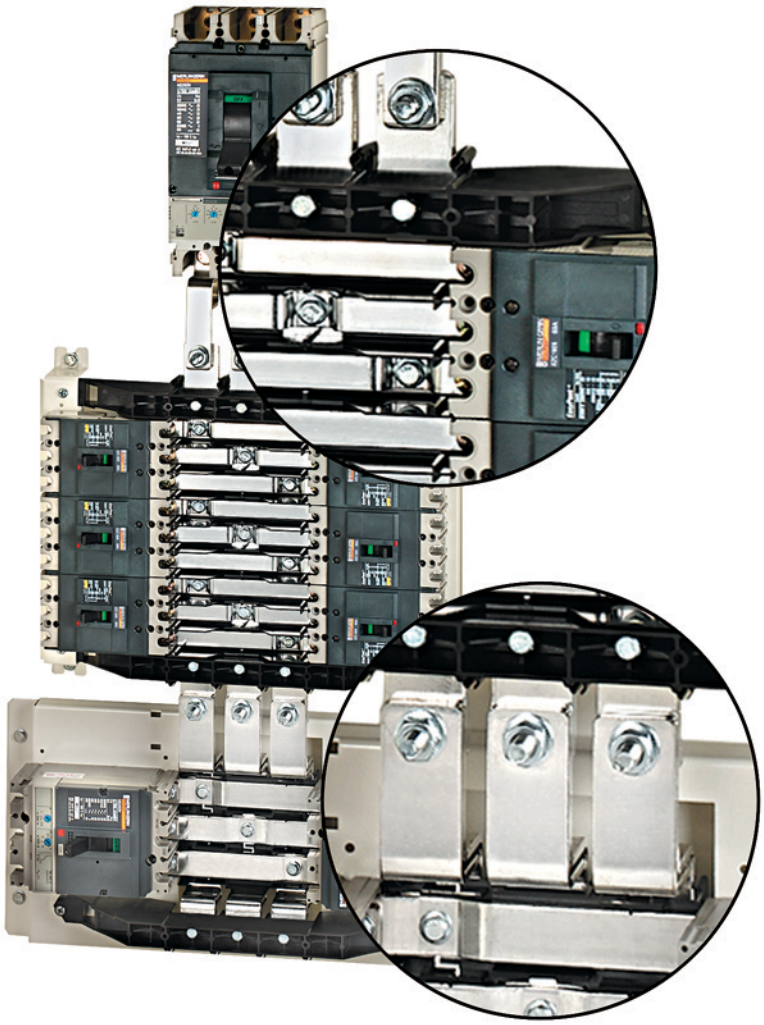

Premium Materials make a premium busbar system

- Solid copper busbars and connectors for cool, care-free operation.
- Electro-tin plating on all busbars and connectors for corrosion resistance in all environments.
- Fiberglass reinforced nylon bus supports for strength and dimensional stability.
- Molded thermoplastic phase barriers to maintain alignment and ensure electrical isolation between phases.

Busbars characteristics

EZ148P-60

Enclosed 10 ways Busbar 250 A with 250 A main incomer.

Compliance with standards

The EasyPact Busbar System is designed and certified to meet all international requirements specified in IEC 60439-1 relating to construction of Low Voltage switchgear and controlgear assemblies, including:

- verification of temperature - rise limits
- verification of dielectric properties
- verification of short-circuit withstand strength
- verification of clearances and creepage distances.

In addition, the system has been type-tested in ASTA labs to confirm the short-circuit and short-time withstand ratings.

EasyPact Busbar System		EZB250					EZB400					EZB630				
Number of ways		4	6	8	10	12	4	6	8	10	12	4	6	8	10	12
Numbers of outgoings (EasyPact 100)	1P	12	18	24	30	36	12	18	24	30	36	12	18	24	30	36
	2P	6	8	12	14	18	6	8	12	14	18	6	8	12	14	18
	3P	**4**	**6**	**8**	**10**	**12**	**4**	**6**	**8**	**10**	**12**	**4**	**6**	**8**	**10**	**12**
Extension for EZ/NS breakers		No extension					Yes (2 or 4 Ways)					Yes (2 or 4 Ways)				
Electrical characteristics																
Rated incoming current (A)		**250**					**400**					**630**				
Rated operational voltage (V)	AC 50/60 Hz	550					550					550				
Rated insulation voltage (V)		690					690					690				
Breaking capacity		Refer to cascading tables page 60														
Rated short-time withstand current (kA rms)	1 sec.	30					40					40				
Dimensions																
Dimensions H x W x D **(mm)**	4 Ways	268.5 x 416 x 82.5					290 x 416 x 107					290 x 416 x 107				
	6 Ways	343.5 x 416 x 82.5					365 x 416 x 107					365 x 416 x 107				
	8 Ways	418.5 x 416 x 82.5					440 x 416 x 107					440 x 416 x 107				
	10 Ways	493.5 x 416 x 82.5					515 x 416 x 107					515 x 416 x 107				
	12 Ways	568.5 x 416 x 82.5					590 x 416 x 107					590 x 416 x 107				

Main busbars and extension

EZ149P-60

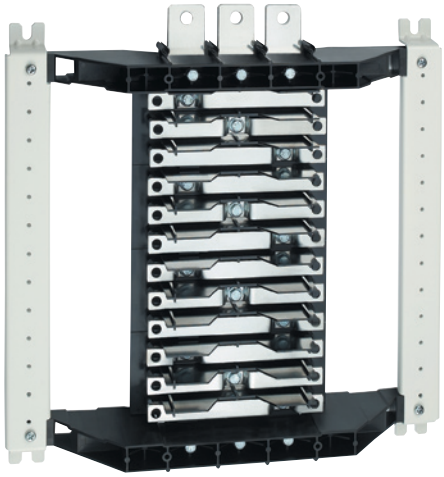

EasyPact Busbar EZB250W08.

Main busbar

The core of the EasyPact Busbar System includes the main busbars and outgoing connectors for EasyPact MCCB's.

Designation	Cat. no.		
Type	**EZB250**	**EZB 400**	**EZB630**
Main busbar current rating	**250 A**	**400 A**	**630 A**
Number of ways			
4 Ways	**EZB250W04**	**EZB400W04**	**EZB630W04**
6 Ways	**EZB250W06**	**EZB400W06**	**EZB630W06**
8 Ways	**EZB250W08**	**EZB400W08**	**EZB630W08**
10 Ways	**EZB250W10**	**EZB400W10**	**EZB630W10**
12 Ways	**EZB250W12**	**EZB400W12**	**EZB630W12**

DB106004

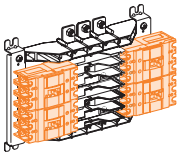

4 Ways with 3 poles.

DB106020

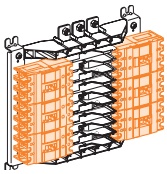

6 Ways with 3 poles.

DB106023

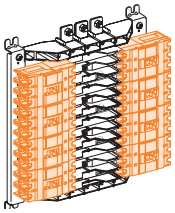

8 Ways with 3 poles.

DB106024

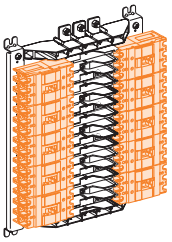

10 Ways with 3 poles.

DB106025

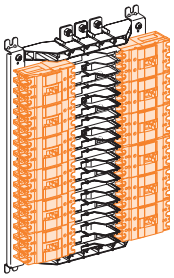

12 Ways with 3 poles.

DB106306

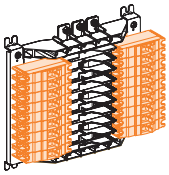

6 Ways with 1 pole.

DB106307

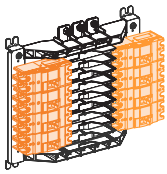

6 Ways with 1 pole.

E88637-60

EasyPact and Compact NS branch breaker extension 2 Ways.

EasyPact and Compact NS branch extension

For applications calling for larger than 100 A outgoing MCCB's, EasyPact Busbar rated 400 A and 630 A can accept the 2 Ways or 4 Ways EasyPact and Compact NS branch extension for up to four additional 250 A max. outgoing circuits. EasyPact and Compact NS branch extensions simply connect directly to the terminals provided on the EZB400 and EZB630 EasyPact Busbar.

Designation	Cat. no.
EZ/NS/NB branch breaker extension	
2 Ways	**EZBNS2**
4 Ways	**EZB2NS2**

Accessories

E88301-50

Main incoming connections

Incoming cables with crimped lugs can connect directly to the terminals provided.

DB106042

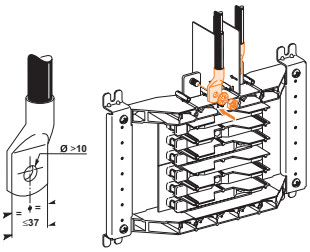

EZ117P-60

Main connectors

For installing a main disconnect device (EasyPact or Compact NS MCCB or INS switch) ahead of EasyPact Busbar, use the tin-plated copper connector kits below.

Designation	Cat. no.		
Main Busbar current rating	**250 A**	**400 A**	**630 A**
Main disconnect device for EasyPact or Compact NS or INS switch	**EZB250MCNS**	**EZB400MCNS**	**EZB630MCNS**

E88309-50

Mechanical lugs

For incoming cables without crimped lugs, use the mechanical lug kits below. Each kit contains three aluminium lugs suitable for copper or aluminium cables.

Designation	Cat. no.		
Main Busbar current rating	**250 A**	**400 A**	**630 A**
Incoming cable size	16-150 mm²	35-300mm²	25-240 mm² 2 cables per phase
Lug kit	**EZB250MLUG**	**EZB400MLUG**	**EZB630MLUG**

DB106043

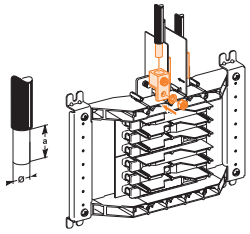

DB112475

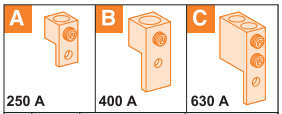

	a	Ø	↻
A	26	16-150 mm²	31 Nm
B	35	35-300 mm²	56 Nm
C	30	25-240 mm²	56 Nm
	60	25-240 mm²	56 Nm

E88310-54

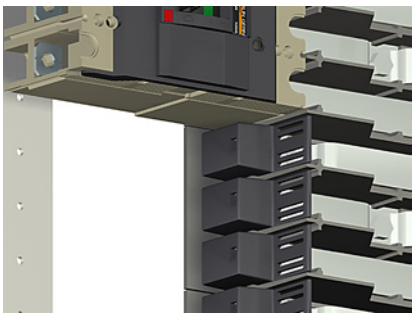

Connector caps

Connector caps are available to isolate the ends of connectors in positions where branch breakers are not installed.
Mounting screws are provided for an insulating barrier (locally provided) to cover the branch connectors when IP2X finger safety is specified.

Designation	Cat. no.
Connector caps (set of 3)	
Caps for 100 A outgoings	**EZB100CAP**
Caps for 250 A outgoings	**EZB250CAP**

DB10639

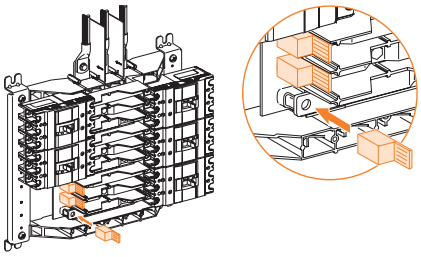

Dimensions
Busbar EZB250

Layout installation EZB250

Panel layout using the EasyPact Busbar is simple using the guides below. In addition to the mounting locations for the busbar and main disconnect components (if required), make note of the minimum clearances required to the top, bottom and sides of the enclosure.

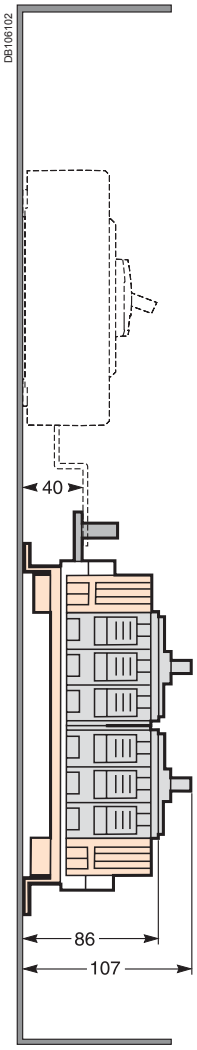

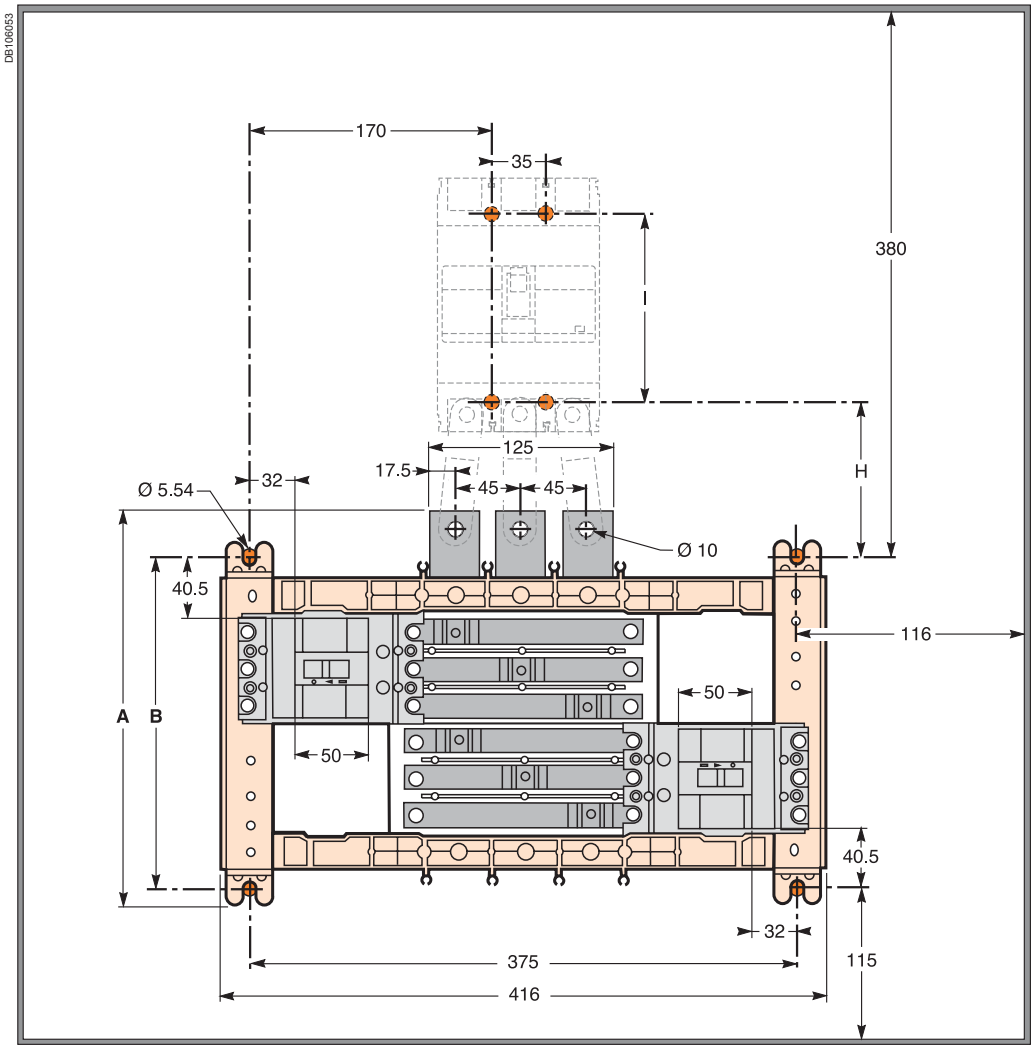

EZB250 - 250 A main busbar rating.

Trim cut-out

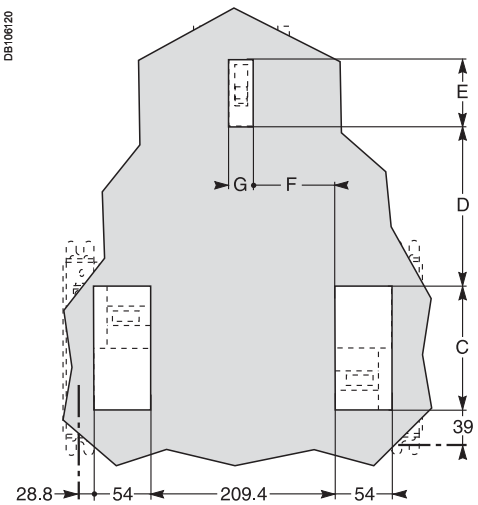

	A	B	C	D	E	F	G	H	I
EZ250 incomer	-	-	-	187.4	52	92.7	24	109.5	126
NS incomer	-	-	-	182.4	76	90.2	29	108	125
4 ways	268.5	225	147	-	-	-	-	-	-
6 ways	343.5	300	222	-	-	-	-	-	-
8 ways	418.5	375	297	-	-	-	-	-	-
10 ways	493.5	450	372	-	-	-	-	-	-
12 ways	568.5	525	447	-	-	-	-	-	-

Dimensions
Busbars EZB400/630

Layout installation EZB400/630

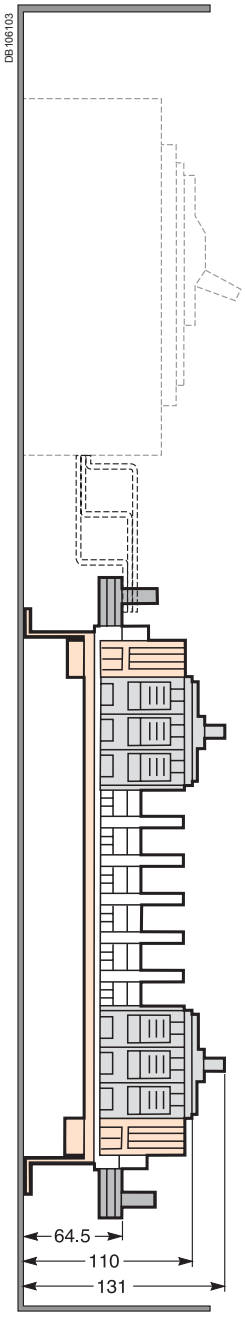

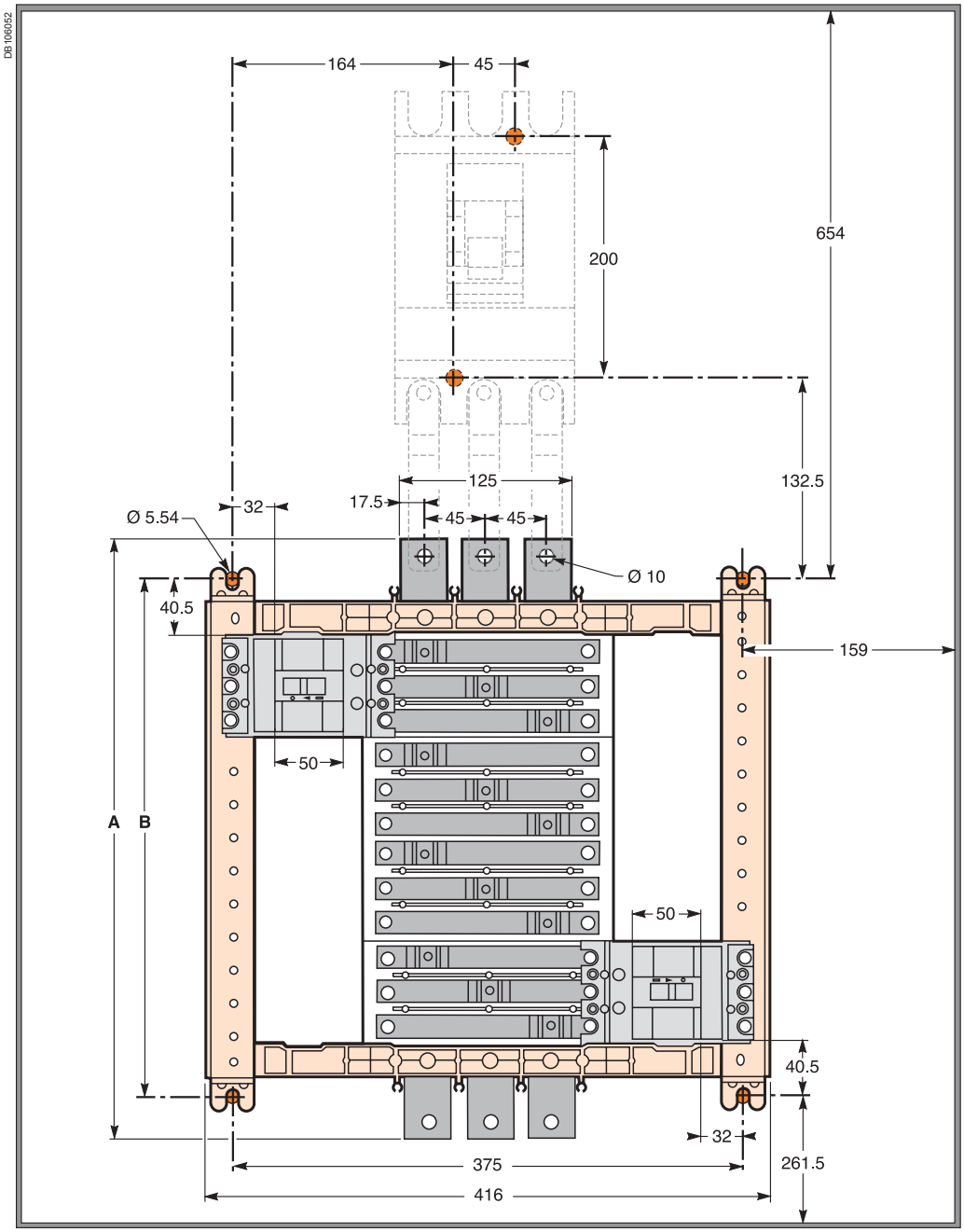

EZB400 and EZB630 - 400 A and 630 A main busbar ratings.

Trim cut-out

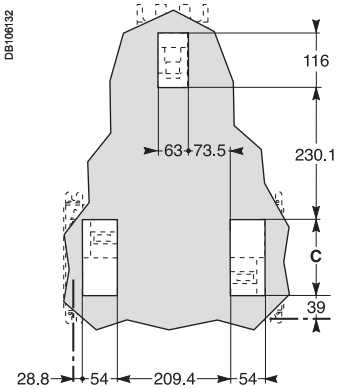

	A	B	C
4 ways	290	225	147
6 ways	365	300	222
8 ways	440	375	297
10 ways	515	450	372
12 ways	590	525	447

Note: *to avoid excess temperature rise on incoming MCCB terminals, panels using 630 A main breaker with these minimum enclosure dimensions require a 7000 mm² ventilation opening (after subtracting effects of screening) at each of the 4 corners of the enclosure.*

Dimensions
EasyPact or Compact NS branch extensions layout

Layout installation for EasyPact or Compact NS/NB branch extensions

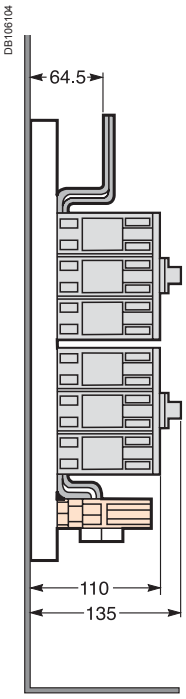

EZBNS2 and EZBNS4 Compact NS branch breaker extension.

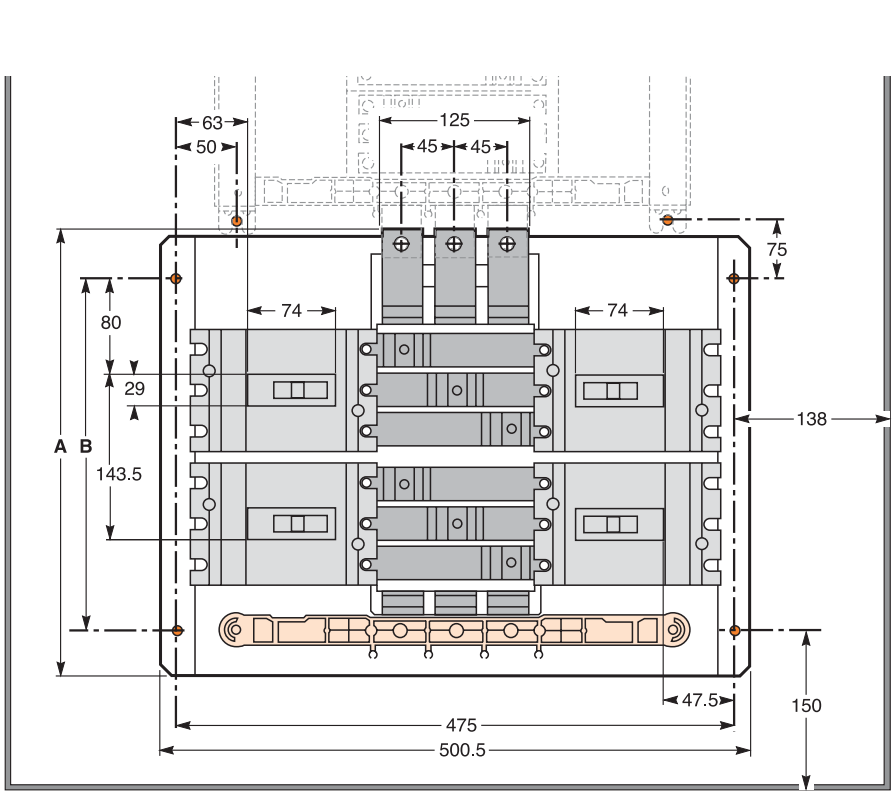

	A	B	C	D	E	F	G	H
EZBNS2	270	175	NA	-	-	-	-	-
EZBNS4	384	275	85.5	-	-	-	-	-
EZC250	-	-	90.5	57.5	24	61	52	249
NS250	-	-	85.5	78.5	29	45.5	76	232

Trim cut-out

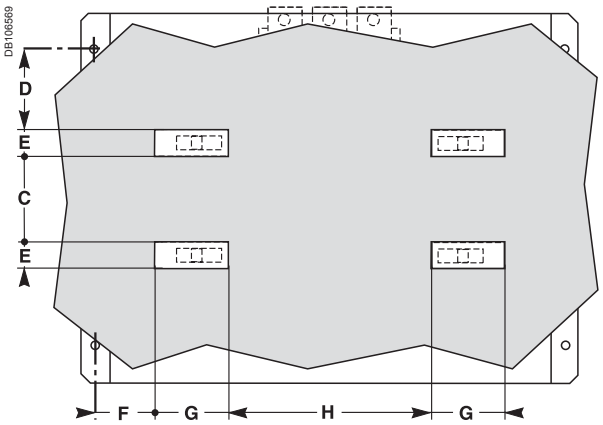

Notes

Notes

Notes

Schneider Electric Industries SAS
89, boulevard Franklin Roosevelt
F - 92500 Rueil-Malmaison (France)
Tel : +33 (0)1 41 29 85 00

http://www.schneider-electric.com

As standards, specifications and designs change from time to time, please ask for confirmation of the information given in this publication.

This document has been printed on ecological paper.

Design: Schneider Electric
Photos: Schneider Electric
Printed: Centre Impression - Made in France