LC1 F115 to F330

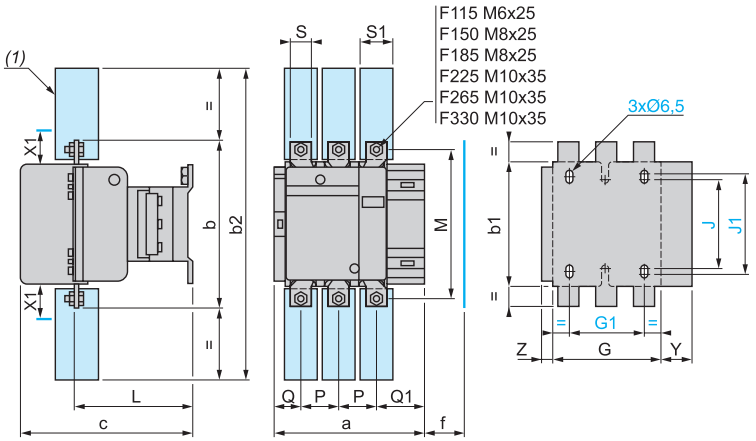

X1 (mm) = Minimum electrical clearance according to operating voltage and breaking capacity.

LC1	200…500 V	600…1000 V
F115, F150	10	15
F185	10	15
F225, F265	10	15
F330	10	15

(1) Power terminal protection shroud (see page 5/126).

LC1		a	b	b1	b2	c	f	G	G1	J	J1	L	M	P	Q	Q1	S	S1	Y	Z
F115	3P	163.5	162	137	265	171	131	106	80	106	120	107	147	37	29.5	60	20	26	44	13.5
	4P	200.5	162	137	265	171	131	143	80	106	120	107	147	37	29.5	60	20	26	44	13.5
F150	3P	163.5	170	137	301	171	131	106	80	106	120	107	150	40	26	57.5	20	34	44	13.5
	4P	200.5	170	137	301	171	131	143	80	106	120	107	150	40	26	55.5	20	34	44	13.5
F185	3P	168.5	174	137	305	181	130	111	80	106	120	113.5	154	40	29	59.5	20	34	44	13.5
	4P	208.5	174	137	305	181	130	151	80	106	120	113.5	154	40	29	59.5	20	34	44	13.5
F225	3P	168.5	197	137	364	181	130	111	80	106	120	113.5	172	48	21	51.5	25	44.5	44	13.5
	4P	208.5	197	137	364	181	130	151	80	106	120	113.5	172	48	17	47.5	25	44.5	44	13.5
F265	3P	201.5	203	145	375	213	147	142	96	106	120	141	178	48	39	66.5	25	44.5	38	21.5
	4P	244.5	203	145	375	213	147	190	96	106	120	141	178	48	34	66.5	25	44.5	38	21.5
F330	3P	213	206	145	375	219	147	154.5	96	106	120	145	181	48	43	74	25	44.5	38	20.5
	4P	261	206	145	375	219	147	202.5	96	106	120	145	181	48	43	74	25	44.5	38	20.5

f = minimum distance required for coil removal.

LC1 F400 and F500

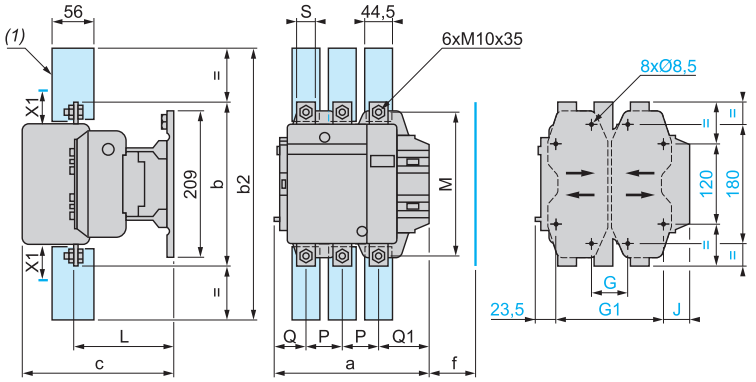

X1 (mm) = Minimum electrical clearance according to operating voltage and breaking capacity.

LC1	200…500 V	600…1000 V
F400	15	20
F500	15	20

(1) Power terminal protection shroud (see page 5/126).

LC1		a	b	b2	c	f	G supplied	G min.	G max.	G1 supplied	G1 min	G1 max.	J	L	M	P	Q	Q1	S
F400	2P	213	206	375	219	146	80	66	102	170	156	192	19.5	145	181	48	69	96	25
	3P	213	206	375	219	146	80	66	102	170	156	192	19.5	145	181	48	43	74	25
	4P	261	206	375	219	146	80	66	150	170	156	240	67.5	145	181	48	43	74	25
F500	2P	233	238	400	232	150	80	66	120	170	156	210	39.5	146	208	55	76	102	30
	3P	233	238	400	232	150	80	66	120	170	156	210	39.5	146	208	55	46	77	30
	4P	288	238	400	232	150	140	66	175	230	156	265	34.5	146	208	55	46	77	30

f = minimum distance required for coil removal.

Selection : pages 5/194 to 5/217
Characteristics : pages 5/106 to 5/113
References : pages 5/114 to 5/117
Schemes : page 5/146

LC1 F630 and F800

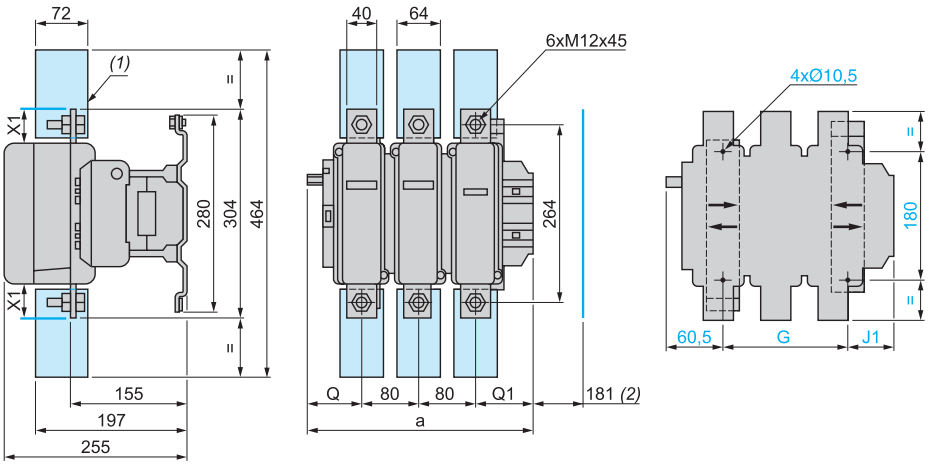

LC1		a	G supplied	G min.	G max.	J1	Q	Q1
F630	2P	309	180	100	195	68.5	102	127
F630, F800	3P	309	180	100	195	68.5	60	89
F630	4P	389	240	150	275	68.5	60	89

X1 (mm) = Minimum electrical clearance according to operating voltage and breaking capacity.

Voltage	200…500 V	690…1000 V	200…690 V	1000 V
LC1 F630	20	30	–	–
LC1 F800	–	–	10	20

(1) Power terminal protection shroud (see page 5/126).
(2) Minimum distance required for coil removal.

LC1 F780

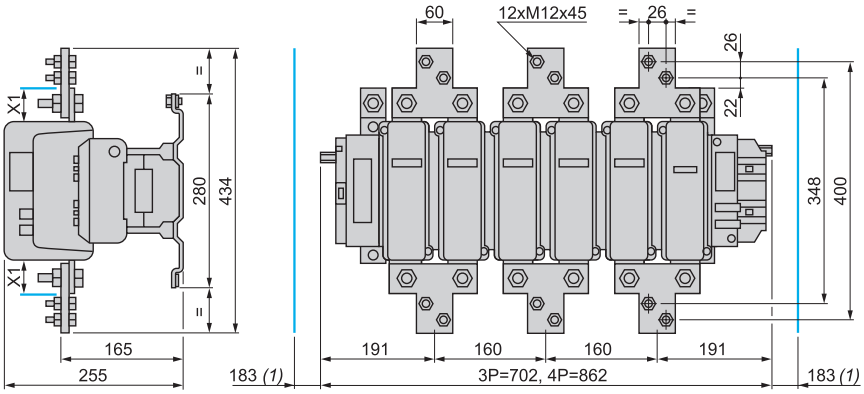

X1 (mm) = Minimum electrical clearance according to operating voltage and breaking capacity.

Voltage	200…500 V	690…1000 V
X1 (mm)	30	35

(1) Minimum distance required for coil removal.

Fixing centres of LC1 F7804

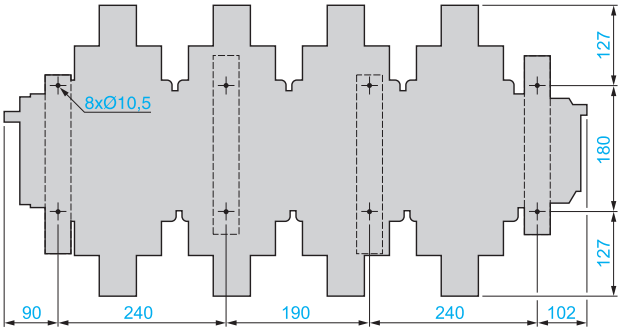

Fixing centres of LC1 F780

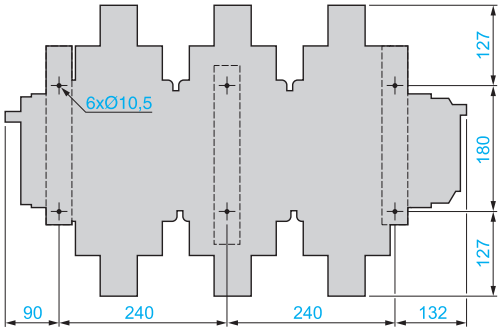

Selection : pages 5/194 to 5/217
Characteristics : pages 5/106 to 5/113
References : pages 5/114 to 5/117
Schemes : page 5/146

LC1 F1700 and LC1 F2100

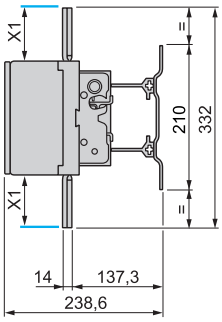

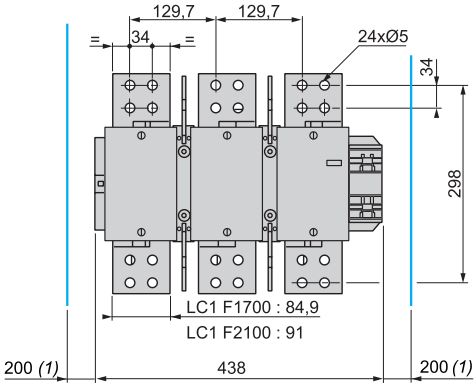

X1 (mm) = Minimum electrical clearance according to operating voltage and breaking capacity.

Voltage	200…500 V	690…1000 V
X1 (mm)	90	100

(1) Minimum distance required for coil removal.

Fixing centres of LC1 F1700 and 2100

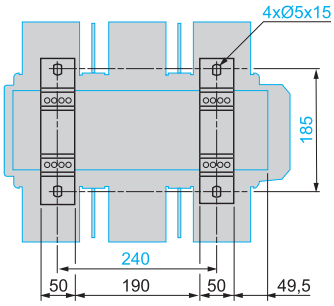

5

Right-angled connectors LA9 F●981 (set of 3) for rear connection

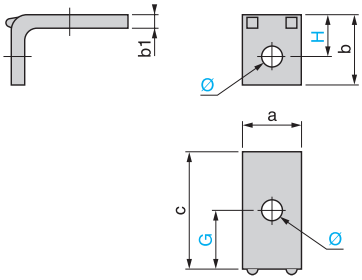

LA9	FF981	FG981	FJ981	FK981	FL981
a	15	20	25	30	40
b	18	23	29	35	48
b1	3	3	4	5	8
c	42	45	55	52	86
G	24	26	32.5	26	45
H	10.5	13	16.5	20	28
Ø	6.5	9	11	11	13

Right-angled connectors LA9 F●979 (set of 3) for side connection

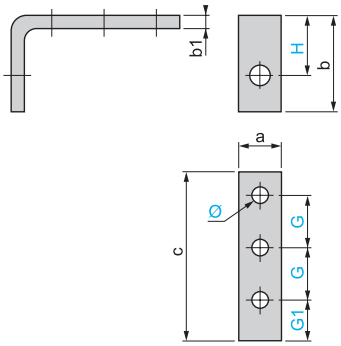

LA9	FF979	FG979	FJ979	FK979	FL979
a	15	20	25	30	40
b	54	58	63.5	68	117
b1	5	5	6	6	10
c	80	92	120	120	130
G	24	28	37	37	37.5
G1	20	22	29	29	35
H	36	39	41	42	76
Ø	6.5	9	11	11	13

Right-angled connectors LA9 F●980 with large surface area (set of 3)

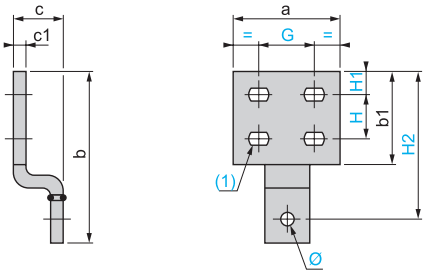

LA9	FF980	FG980	FJ980	FK980	FL980
a	35	40	50	60	100
b	70.5	82.5	98.5	114	154
b1	40	45	55	65	85
c	29	29	33	33	43
c1	3	3	5	5	10
G	18	20	25	29	53
H	18	20	22	26	40
H1	10	12	14	17	20
H2	60.5	72.5	84.5	97	132
Ø	6.5	9	11	11	13
(1)	Ø 7 x 10	Ø 9 x 12	Ø 11 x 14	Ø 12.5 x 15	Ø 12.5 x 15

Right-angled connectors LA9 F2100 (set of 6) for rear connection

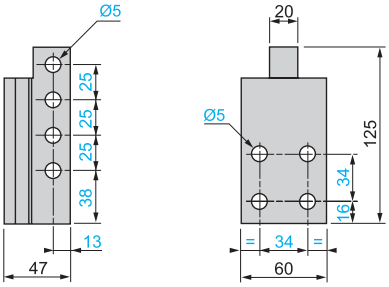

References :
page 5/125

5

Paralleling links (set of 4)

LA9 FF602, FG602, FH602

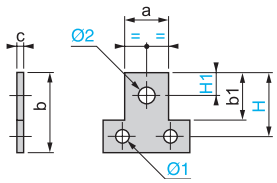

LA9 FK602, FL602

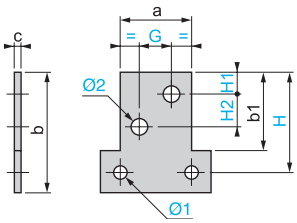

LA9	FF602	FG602	FH602	FK602	FL602
a	25	30	40	50	60
b	45	55	60	85	100
b1	30	35	40	55	65
c	4	5	8	10	10
G	–	–	–	22	26
H	37.5	45	52.5	70	85
H1	12.5	15	15	14	17
H2	–	–	–	22	26
Ø1	6.5	9	11	11	13
Ø2	11	11	13	11	14

Links for "star" connection of 3 poles

LA9 F●601

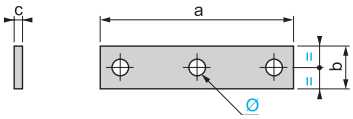

LA9	FF601	FG601	FH601	FK601	FL601
a	69	100	121	140	200
b	15	20	20	30	40
c	3	3	5	5	8
Ø	6.5 x 8.5	8.5 x 10.5	10.5 x 13	11	13

5

References :
page 5/124

Schneider Electric

LC1 F115 to F330

On panel

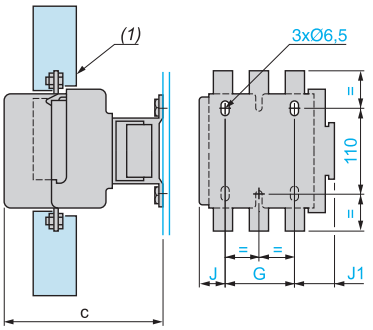

LC1		F115 F150	F185 F225	F265	F330
c (2)	3P	171	181	213	219
	4P	171	181	213	219
G	3P	80	80	96	96
	4P	80	80	96	96
J	3P	26.5	29	44.5	44.5
	4P	45	49	68.5	68.5
J1	3P	57	59.5	61.5	61.5
	4P	75.5	79.5	85.5	85.5

On pre-slotted mounting plate AM1 PA, PB, PC

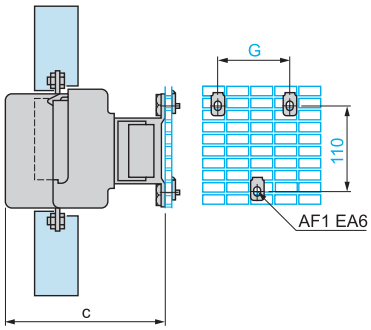

LC1		F115 F150	F185 F225	F265	F330
c (2)	3P	171	181	213	219
	4P	171	181	213	219
G	3P	80	80	96	96
	4P	80	80	96	96

On rails DZ5 MB on 120 mm centres

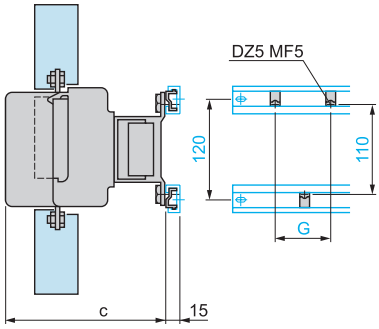

LC1		F115 F150	F185 F225	F265	F330
c (2)	3P	171	181	213	219
	4P	171	181	213	219
G	3P	80	80	96	96
	4P	80	80	96	96

LC1 F

On 2 notched rails AM1 EC●●●

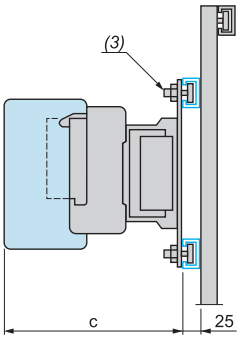

LC1 F115 to F330

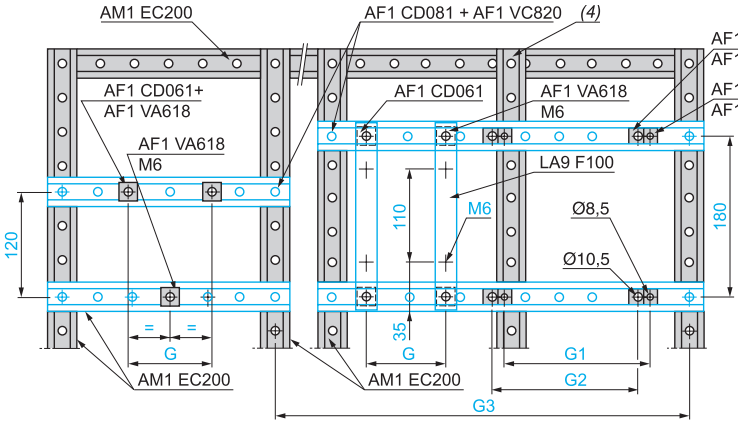

LC1 F400 to F800

LC1		F115, F150	F185, F225	F265	F330	F400	F500	F630	F780	F800
c	3P	165 (5)	176	207	213	219	232	255	255	255
	4P	165 (5)	176	207	213	219	232	255	255	–
G (M6)	3P	80	80	96	96	–	–	–	–	–
	4P	80	80	96	96	–	–	–	–	–
G1 (∅ 8.5)	3P	–	–	–	–	80	80	–	–	–
	4P	–	–	–	–	80	140	–	–	–
G2 (∅ 10.5)	3P	–	–	–	–	–	–	180	See page 5/141	180
	4P	–	–	–	–	–	–	240		–

(1) Power terminal protection shroud (see page 5/126).
(2) See X1 (minimum electrical clearance) pages 5/140 and 5/141.
(3) AF1 CD●●● and AF1 VA●●●.
(4) This AM1 EC200 upright is required when G2 or G3 is greater than 700 mm (please consult your Regional Sales Office).
(5) + 6 mm with time-delay block on LC1 F.

Contactors

2, 3 and 4-pole contactors

LC1 F115 to F630
(coil LX1 F ∿)

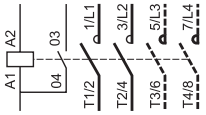

LC1 F115 to F630 (coil LX4 F ⎓)
LC1 F115 to F265 (coil LX9 F ∿)
LC1 F800 (coil LX8 F ∿/ ⎓)

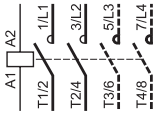

LC1 F780 ∿ or ⎓

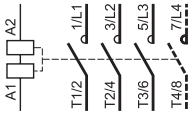

LC1 F1700 ∿ or ⎓
LC1 F2100 ∿ or ⎓

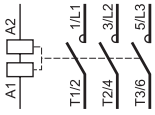

Coils

Standard ∿ coils

LX1 FF, FG, FJ…FL
LX1 FH0422…FH3802

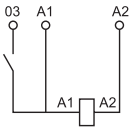

LX1 FH0202…FH0362
LX1 FH4402…FH10002
LX1 F8●

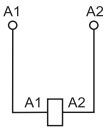

LX1 FX
Rectifier supplied and fixed on the contactor

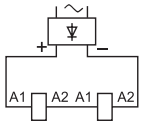

Standard ⎓ coils

LX4 FF, FG, FH, FJ, FK, FL, FX *(1)*, **LX4 F8●**

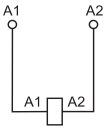

(1) 2 coils in series.

Special ∿ coils

LX9 FF, FG

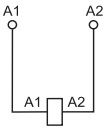

LX9 FH●●●2

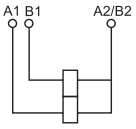

LX9 FJ, FK, FL

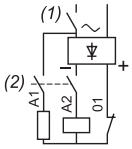

LX4 F8●

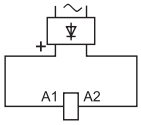

(1) Breaking on ∿ side.
Drop-out time 50 ms .
(2) Breaking on ⎓ side.
Drop-out time 20 ms .

5

Add-on blocks

Instantaneous auxiliary contacts

1 N/O LAD N10 *(1)*

1 N/C LAD N01 *(1)*

1 N/O + 1 N/C LAD N11

2 N/O LAD N20

2 N/C LAD N02

2 N/O + 2 N/C LAD N22

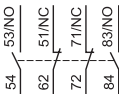

1 N/O + 3 N/C LAD N13

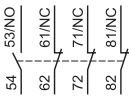

4 N/O LAD N40

4 N/C LAD N04

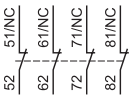

2 N/O + 2 N/C (2) LAD C22

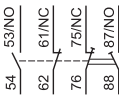

3 N/O + 1 N/C LAD N31

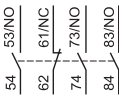

(1) Items in brackets: See "TeSys D contactors".

(2) 1 N/O + 1 N/C make before break.

Instantaneous auxiliary contacts with terminal referencing conforming to standard EN 50012 (References: pages 5/122 and 5/123)

1 N/O + 1 N/C
LAD N11P

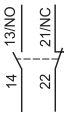

1 N/O + 1 N/C
LAD N11G

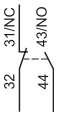

2 N/O + 2 N/C
LAD N22P

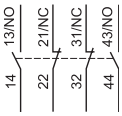

2 N/O + 2 N/C
LAD N22G

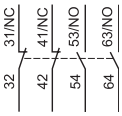

Dust and damp protected instantaneous auxiliary contacts

2 N/O (24-50 V)
LA1 DX20

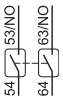

2 N/O (5-24 V)
LA1 DY20

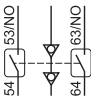

2 N/O protected (24-50 V) + 2 N/O standard
LA1 DZ40

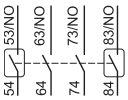

2 N/O protected (24-50 V) + 1 N/O + 1 N/C standard
LA1 DZ31

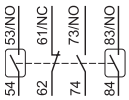

Time delay auxiliary contacts

On-delay 1 N/O +1 N/C LAD T●

Off-delay 1 N/O + 1 N/C LAD R●

On-delay 1 N/C + 1 N/O break before make LAD S●

5

TeSys contactors

TeSys F reversing contactors and changeover contactor pairs

Horizontally mounted

Pre-assembled

LC2 F115 to F265 (reverser supplied on 2 bars which can be used for fixing the device)

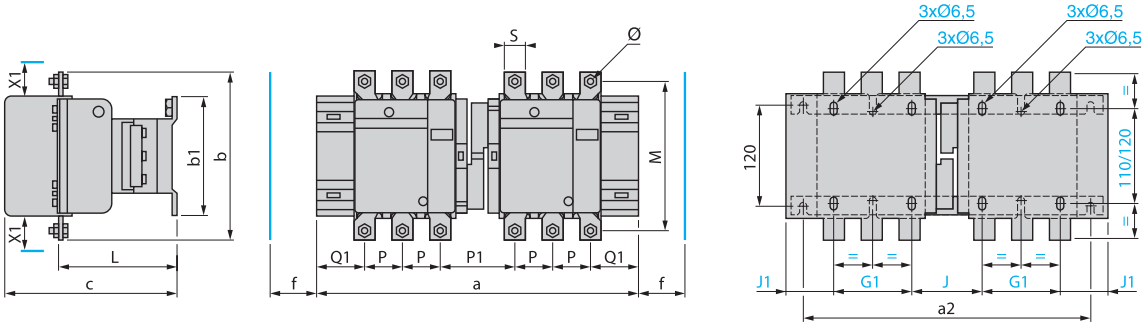

f - Minimum distance required for coil removal.

Bar fixing centres
Vertical: 120 mm
Horizontal: a2 see table

X1 (mm) = Minimum electrical clearance according to operating voltage and breaking capacity.

LC1	200…500 V	660…1000 V
F115, F150	10	15
F185	10	15
F225, F265	10	15

5

LC2		a	a2	b	b1	c	G1	J	J1	L	M	P	P1	Q1	S	f	Ø
F115	3P	345	317	162	137	171	80	71	57	107	147	37	77	60	20	131	M6
	4P	419	378	162	137	171	80	108	75.5	107	147	37	77	60	20	131	M6
F150	3P	345	317	170	137	171	80	71	57	107	150	40	71	57	20	131	M8
	4P	422	381	170	137	171	80	111	75.5	107	150	40	71	55.5	20	131	M8
F185	3P	357	326	174	137	181	80	78	59.5	113.5	154	40	78	59.5	20	130	M8
	4P	437	390	174	137	181	80	118	79.5	113.5	154	40	78	59.5	20	130	M8
F225	3P	357	326	197	137	181	80	78	59.5	113.5	172	48	62	51.5	25	130	M10
	4P	437	390	197	137	181	80	118	79.5	113.5	172	48	54	47.5	25	130	M10
F265	3P	425	386	203	145	213	96	109	61.5	141	178	48	100	66.5	25	147	M10
	4P	521	464	203	145	213	96	157	85.5	141	178	48	100	66.5	25	147	M10

TeSys contactors

TeSys F reversing contactors and changeover contactor pairs

Horizontally mounted

For customer assembly, fixing recommended on AM1 EC uprights, please consult your Regional Sales Office.

2 x **LC1 F115 to F330**

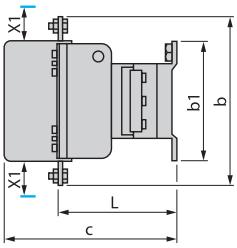

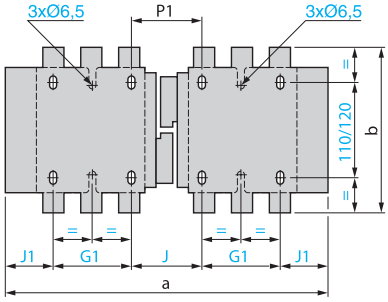

2 x LC1 F400, F500, F630, F800

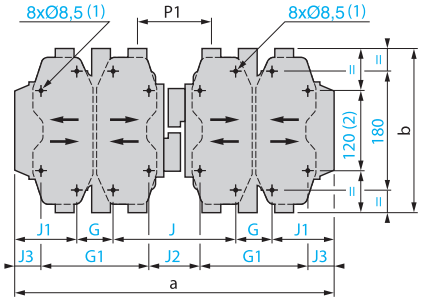

X1 (mm) = Minimum electrical clearance according to operating voltage and breaking capacity.

LC1	200…500 V	660…1000 V	200…690 V	1000 V
F115, F150	10	15	–	–
F185	10	15	–	–
F225, F265	10	15	–	–
F330	10	15	–	–
F400	15	20	–	–
F500	15	20	–	–
F630	20	30	–	–
F800	–	–	10	20

2 x **LC1**		a	b	b1	c	G	G1	J	J1	J2	J3	L	P1
F115	3P	345	162	137	171	–	80	71	57	–	–	107	77
	4P	419	162	137	171	–	80	108	75.5	–	–	107	77
F150	3P	345	170	137	171	–	80	71	57	–	–	107	71
	4P	422	170	137	171	–	80	111	75.5	–	–	107	71
F185	3P	357	174	137	181	–	80	78	59.5	–	–	113.5	78
	4P	437	174	137	181	–	80	118	79.5	–	–	113.5	78
F225	3P	357	197	137	181	–	80	78	59.5	–	–	113.5	62
	4P	437	197	137	181	–	80	118	79.5	–	–	113.5	54
F265	3P	425	203	145	213	–	96	109	61.5	–	–	141	100
	4P	521	203	145	213	–	96	157	85.5	–	–	141	100
F330	3P	447	206	145	219	–	96	124	65.5	–	–	145	107
	4P	543	206	145	219	–	96	172	89.5	–	–	145	107
F400	3P	446	206	209	219	80	170	157	64.5	67	19.5	145	107
	4P	542	206	209	219	80	170	157	112.5	67	67.5	145	107
F500	3P	485	238	209	232	80	170	156	84.5	66	39.5	146	112
	4P	595	238	209	232	140	230	156	79.5	66	34.5	146	112
F630	3P	636	304	280	255	180	–	139	68.5	–	–	155	137
	4P	796	304	280	255	240	–	139	88.5	–	–	155	137
F800	3P	636	304	280	255	180	–	139	68.5	–	–	155	137

(1) Except LC1 F630 and F800 : 4 x Ø 10.5.
(2) Except LC1 F630 and F800.
For other dimensions: see pages 5/140 and 5/141.

TeSys contactors

TeSys F reversing contactors and changeover contactor pairs

Vertically mounted

For customer assembly, with mechanical interlock (MI) **LA9 F**, fixing recommended on AM1 EC uprights (please consult your Regional Sales Office).
2 x **LC1** identical or different ratings (**LC1 F115 to F630 and F800**). See pages 5/118 to 5/121

Assembly A

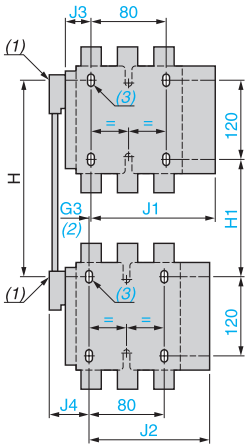

(1) Mechanical interlock shaft.
(2) For assembly of contactors of different ratings only.
(3) 4 x Ø6.5 for LC1 F115 to F225.

Assembly B

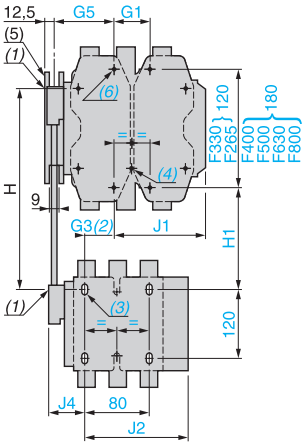

(4) 4 x Ø6.5 for LC1 F265.
(5) Mechanical interlock guide bracket.

Assembly C

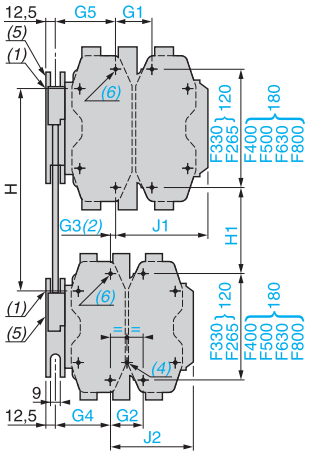

(6) 4 x Ø8.5 for LC1 F400, F500 or 4 x Ø10.5 for LC1 F630 and F800.

Assembly A *(7)* - **Mechanical interlock reference**

	G3 3P	G3 4P	H min.	H max.	H1 min.	H1 max.	J1 3P	J1 4P
LA9 FF4F	0	0	200	310	80	190	137	155.5
LA9 FG4F	3	4	210	300	90	180	139.5	159.5
LA9 FG4G	0	0	220	310	100	190	139.5	159.5

	J2 3P	J2 4P	J3 3P	J3 4P	J4 3P	J4 4P
LA9 FF4F	137	155.5	48.5	67	48.5	67
LA9 FG4F	137	155.5	53	73	54	69
LA9 FG4G	139.5	159.5	53	73	53	73

For customer assembly, fixing recommended on AM1 EC uprights, please consult your Regional Sales Office
2 x **LC1 F780**

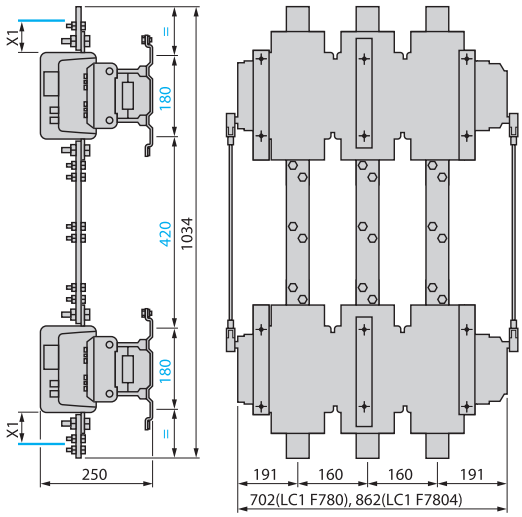

X1 and fixings, see page 5/141.

(7) Only 3P for F800.
(8) In this case, G4 is greater than G5.

Assembly B *(7)* - **Mechanical interlock reference**

	G1 3P	G1 4P	G3 3P	G3 4P	G5 3P	G5 4P	H min.	H max.
LA9 FH4F	96	96	21	27	60	83	240	380
LA9 FJ4F	80	80	45	26	83	83	250	380
LA9 FK4F	80	140	45	26	83	83	270	380
LA9 FL4F	180	240	35	17	74	74	310	380
LA9 FH4G	96	96	19	23	60	83	250	380
LA9 FJ4G	80	80	42	22	83	83	250	380
LA9 FK4G	80	140	42	22	83	83	270	380
LA9 FL4G	180	240	33	13	74	74	310	380

	H1 min.	H1 max.	J1 3P	J1 4P	J2 3P	J2 4P	J4 3P	J4 4P
LA9 FH4F	110	250	157.5	181.5	137	155.5	48.5	67
LA9 FJ4F	80	210	144.5	192.5	137	155.5	48.5	67
LA9 FK4F	100	210	164.5	219.5	137	155.5	48.5	67
LA9 FL4F	140	210	248.5	328.5	137	155.5	48.5	67
LA9 FH4G	120	250	157.5	181.5	139.5	159.5	53	73
LA9 FJ4G	90	220	144.5	192.5	139.5	159.5	53	73
LA9 FK4G	110	220	164.5	219.5	139.5	159.5	53	73
LA9 FL4G	150	220	248.5	328.5	139.5	159.5	53	73

Assembly C *(7)*

	G1 3P	G1 4P	G2 3P	G2 4P	G3 3P	G3 4P	G4 3P	G4 4P	G5 3P	G5 4P
LA9 FH4H	96	96	96	96	0	0	60	83	60	83
LA9 FJ4H	80	80	96	96	23	0	60	83	83	83
LA9 FK4H	80	140	96	96	23	0	60	83	83	83
LA9 FL4H	180	240	96	96	14	9 *(8)*	60	83	74	74
LA9 FJ4J	80	80	80	80	0	0	83	83	83	83
LA9 FK4J	80	140	80	80	0	0	83	83	83	83
LA9 FL4J	180	240	80	80	9 *(8)*	9 *(8)*	83	83	74	74
LA9 FK4K	80	140	80	140	0	0	83	83	83	83
LA9 FL4K	180	240	80	140	9 *(8)*	9 *(8)*	83	83	74	74
LA9 FL4L	180	240	180	240	0	0	74	74	74	74

	H min.	H max.	H1 min.	H1 max.	J1 3P	J1 4P	J2 3P	J2 4P
LA9 FH4H	250	380	130	260	157.5	181.5	157.5	181.5
LA9 FJ4H	260	380	110	230	144.5	192.5	157.5	181.5
LA9 FK4H	280	380	130	230	164.5	219.5	157.5	181.5
LA9 FL4H	330	380	170	220	248.5	328.5	157.5	181.5
LA9 FJ4J	260	380	60	200	144.5	192.5	144.5	192.5
LA9 FK4J	280	380	100	200	164.5	219.5	144.5	192.5
LA9 FL4J	325	380	140	195	248.5	329.5	144.5	192.5
LA9 FK4K	300	380	120	200	164.5	329.5	164.5	219.5
LA9 FL4K	345	380	160	195	248.5	328.5	164.5	219.5
LA9 FL4L	380	380	200	200	248.5	328.5	248.5	328.5

TeSys contactors

TeSys F reversing contactors and changeover contactor pairs

Reversing contactors for motor control LC2 F

2 x **LC1 F**

Horizontally mounted

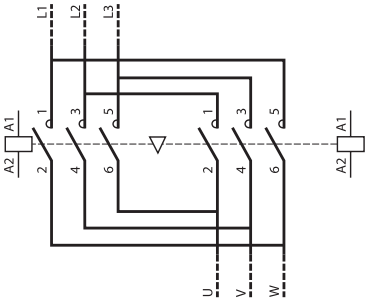

2 x **LC1 F**

Vertically mounted

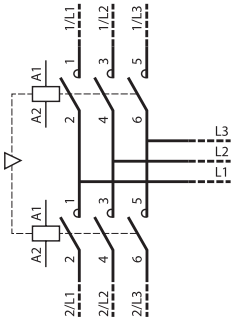

Changeover contactor pairs for distribution LC2 F

2 x **LC1 F**

Horizontally mounted

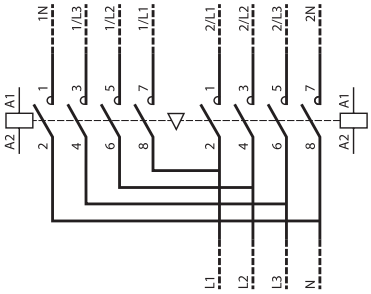

2 x **LC1 F**

Vertically mounted

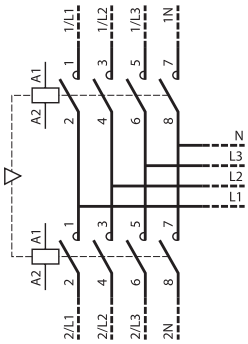

Electrical interlocking of reversers fitted with mechanical interlock without integral electrical contacts

LA9 F

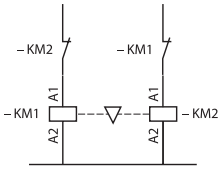

Selection :
pages 5/194 to 5/217

References :
pages 5/116 to 5/121