TeSys protection components

TeSys LR9D electronic thermal overload relays

Overload relays

LR9D01, 02, 08, 32

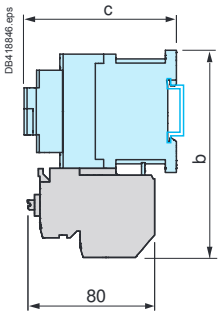

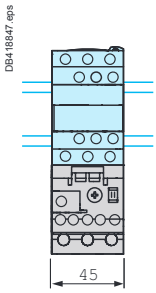

LC1	D09...D18	D25...D38
b	130	140
c	See pages B8/65 and B8/66	

LR9D110S

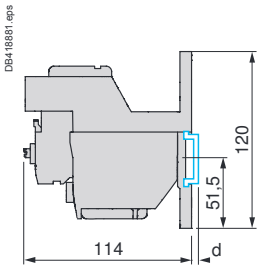

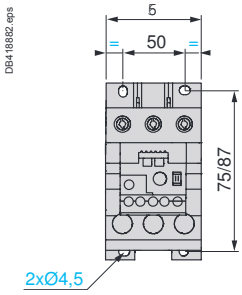

LR9D01...32

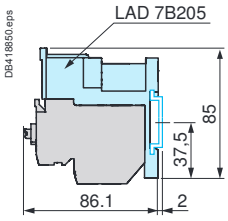

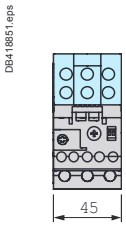

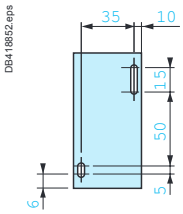

LR9D53pp, LR9D55pp, LR9D67, LR9D69

Direct mounting beneath contactors LC 1D115 and D150

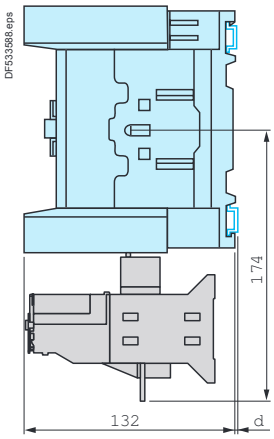

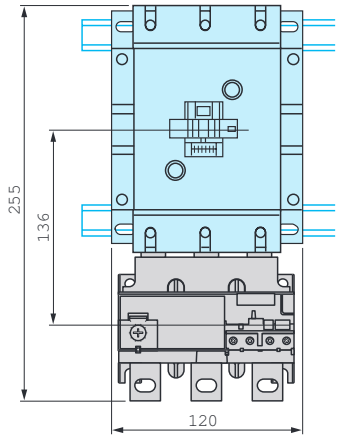

AM1	DP200 and DR200	DE200 and ED●●●
d	2.5	10.5

LR9D

"Reset" by flexible cable

LA7 D305 and LAD 7305

Mounting with cable straight

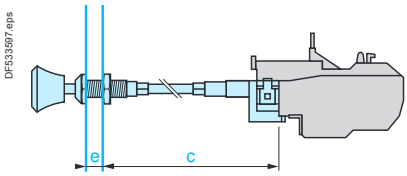

e: up to 20 mm / c: up to 550 mm

Mounting with cable bent

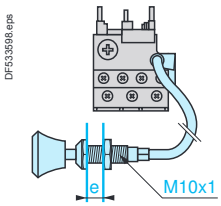

e: up to 20 mm

TeSys protection components

TeSys LR9D electronic thermal overload relays

Overload relays

LR9D01, 02, 08, 32, LR9 D110S

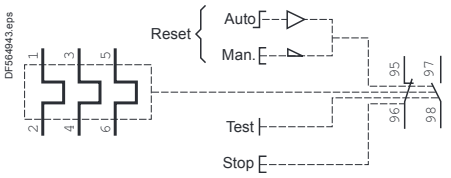

LR9D01, 02, 08, 32, LR9 D110S

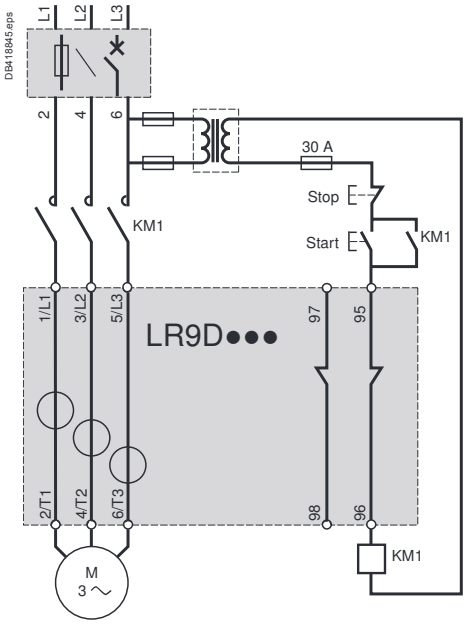

LR9D5•••

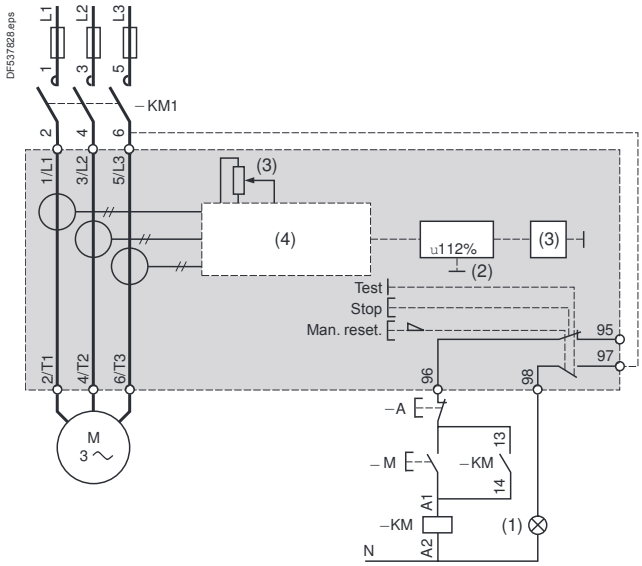

(1) Tripped.
(2) Overload.
(3) Setting current.
(4) Specialised circuit.

LR9 D67 and LR9 D69

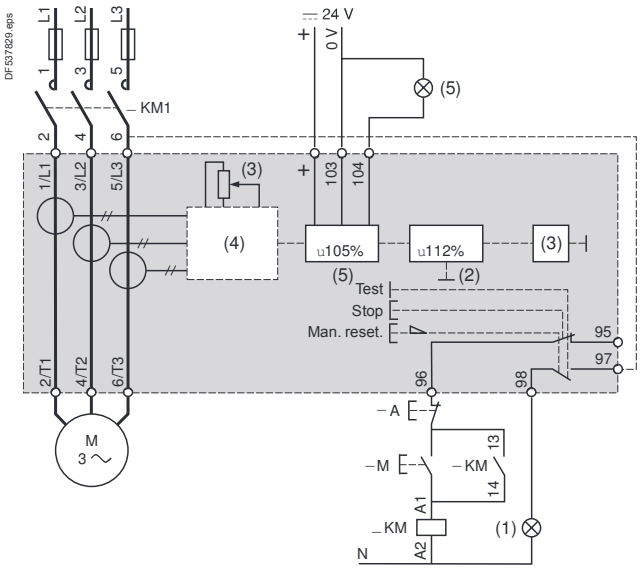

(1) Tripped.
(2) Overload.
(3) Setting current.
(4) Specialised circuit.
(5) Alarm.