SWITCHGEAR
SAFE & SURE

INSTRUCTION MANUAL

DN2 MTX MCCB

d sine

MOULDED CASE CIRCUIT BREAKER
WITH THERMAL-MAGNETIC RELESE
& MICROPROCESSOR RELEASE

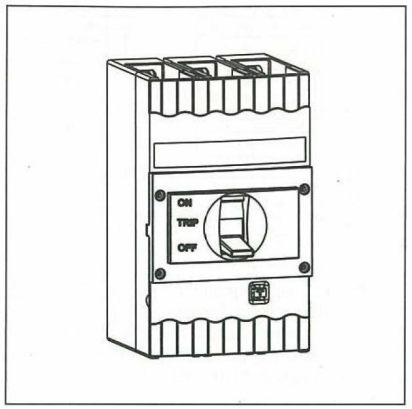

WARNING

Hazards of electric shock and burning. Installation, Commissioning and Maintenance to be done by qualified personnel only. Always use an appropriate voltage detection device to confirm the absence of voltage. Disconnect the power and isolate before proceeding with any work on this equipment. Use according to the operating instructions, professional practices, wiring rules, codes, safety regulations applicable to the installation.

BASE PLATE MOUNTING, OVERALL DIMENSIONS AND PANEL CUT-OUT

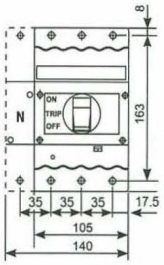

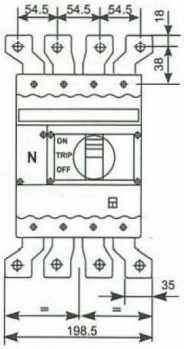

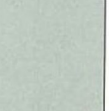

PRODUCT INFORMATION

BASE PLATE MOUNTING, OVERALL DIMENSIONS AND PANEL CUT-OUT

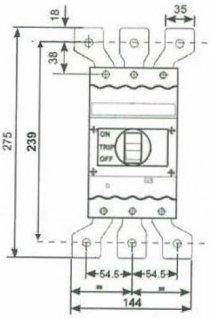

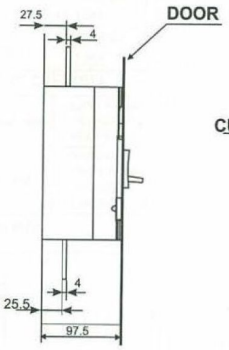

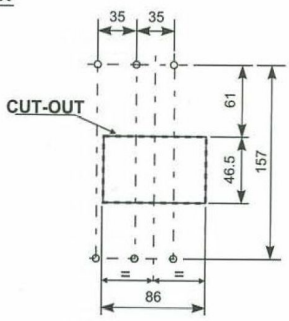

IMPORTANT

IT IS RECOMMENDED TO USE SPREADER LINKS FOR ENHANCING TERMINAL CAPACITY. PLEASE CONTACT NEAREST SALES OFFICE/STOCKIST FOR ORDERING INFORMATION OF SPREADER LINKS.

PRODUCT INFORMATION

MOUNT IN ANY OF THESE THREE ORIENTATIONS

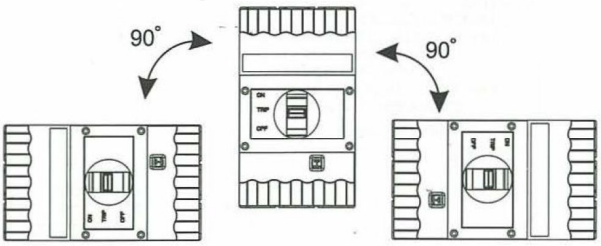

PRODUCT INFORMATION

TERMINATION

HARDWARE

		Qty.(3 P)	(4P)
MOUNTING	WASHER (ID 4.1)	4	6
	M4 HEX NUT	4	6
	M4X70/15MM SCREW	4	6
	WASHER	4	6
TERMINATION	M8 x 25 - 10.8 Nm	6	8
	Spring washer M8	6	8
	Plain washer M8	6	8

TERMINAL CAPACITY

STANDARD	LINK	25 X 5 mm^2
	CABLES	95 mm^2
WITH SPREADER LINKS	LINK	35 X 6 mm^2
	CABLES	185 mm^2
BOX CLAMP	(Cu. CABLE)	120 mm^2
REAR STUDS		120 mm^2

WEIGHT

DN2 160 / 250	
3 P	2.5 Kg.
4 P	3.3 Kg.

OPERATION

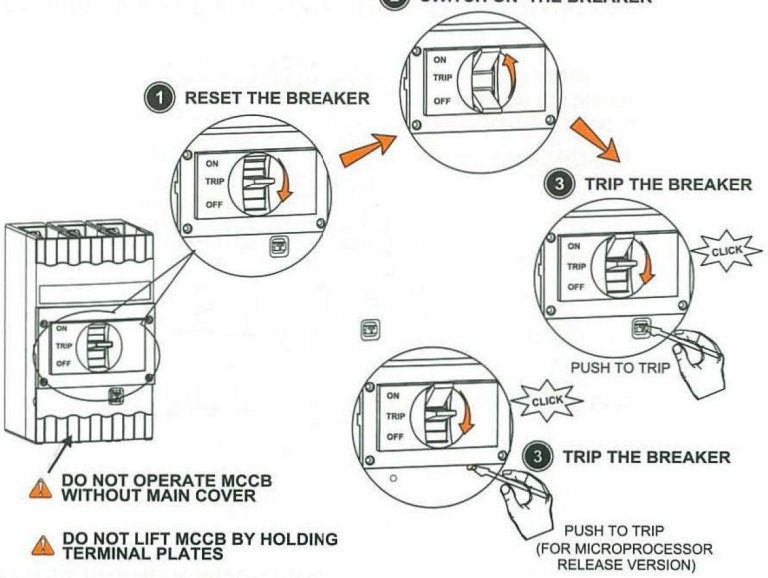

⚠ DO NOT OPERATE MCCB WITHOUT MAIN COVER

⚠ DO NOT LIFT MCCB BY HOLDING TERMINAL PLATES

PRODUCT INSTALLATION

PHASE BARRIER MOUNTING

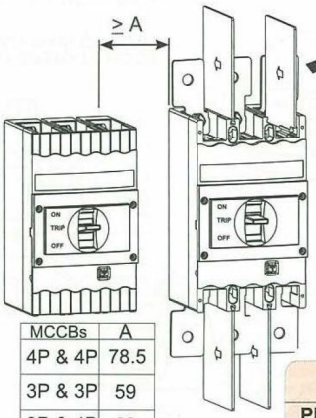

INSERT THIS WAY

NO LOAD-LINE BIAS

LINE SIDE

OR

LINE SIDE

MCCBs	A
4P & 4P	78.5
3P & 3P	59
3P & 4P	69

DISTANCE BETWEEN MCCBs MOUNTED SIDE BY SIDE

⚠ WARNING

Phase barriers must be mounted on the breaker before usage

ENSURE CORRECT N,R,Y,B PHASE SEQUENCE IS MAINTAINED FOR MTX RELEASES

PRODUCT INSTALLATION

MTX 1.0 / 2.0 RELEASE SETTINGS

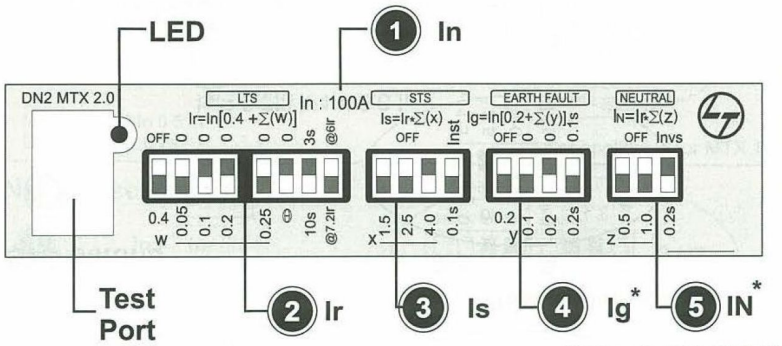

* Not applicable for MTX 1.0

When either LTS (Ir) setting or Earth Fault (Ig) setting are set to OFF the respective protection is defeated.

LED indication:
Power up: 0.3 In
Alarm : 0.85 Ir
Pick up : 1.15 Ir

In : Normal Current
Ir : Overload Current
Is : Short circuit Current
Ig : Earth fault Current
IN : Neutral Current

PRODUCT INFORMATION

LTS Setting

1 In — In

2 Ir — 0.7

Ir = 0.7 In

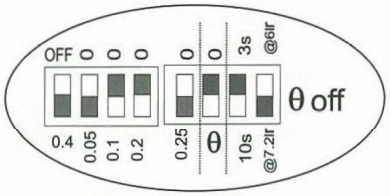

θ denotes Thermal Memory.

STS Setting

3 Is — 4.0

Is = 0.7In x 4 = 2.8 In

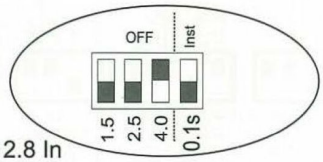

Ir (%In): 0.4 to 1 In in steps of 5%
4 user selectable curves: 6Ir @10s, 6Ir @3s ,7.2Ir @10s, 7.2Ir @ 3s

Is (xIr): 1.5, 2.5, 4, 5.5, 6.5, 8 Ir
Delay: 0.1s
Inst: Instantaneous Setting

PRODUCT INFORMATION

Earth fault setting*

1 In — In

4 Ig — 0.3

Ig = 0.3 In

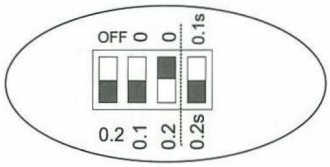

Ig (xIn): 0.20 to 0.5 In
Delay: 0.1s & 0.2s

* Not applicable for MTX 1.0

Neutral setting*

1 In — In

2 Ir — 0.7

Ir = 0.7 In

5 IN — 1.5

IN= 0.7In x 1.5 = 1.05In

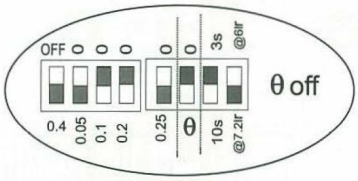

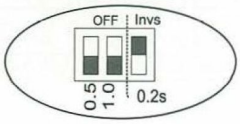

IN (x Ir): 0.5 ,1.0, 1.5 Ir
when Invs ON follows LTS curves
Delay: 0.2s

Ir ≤ 0.7 In for **1.5** Neutral setting with Invs enabled

* Not applicable for MTX 1.0

PRODUCT INFORMATION